ATV 50

Parts List

Initial
Set-up
Instruction

11766R3

This manual contains a complete breakdown of all of the parts and components on your ATV product. Some of these parts and components may only be available in a higher level of assembly

Please check with your servicing dealer, or with a Manco Customer Service Representative for parts availability.

Manco Customer Service 1-800-643-7332

Initial Set-Up Information

Injector Oil

Use a good grade of oil that is specially formulated for two-stroke engines, synthetic type is recommended. Her Chee recommends the following grades of 2-cycle injector oil: TC2, TC3, TC W3.

Transmission Gear Oil

Use multi-grade motor oil of SAE 90 or 85W-140.

Break-In Procedure

Do not operate the ATV at more than half throttle for the first three hours. During the break-in period (the first four tanks of fuel), operate the vehicle at various RPM's and do not operate the vehicle above half throttle for extended periods.

Engine

The ATV-50/90 have a two-stroke, reed induction, piston port motor. It requires the use of two-cycle oil and should never be run without oil in the oil tank. Extreme damage to the motor will result.

Ignition System

The type of ignition system installed on ATV-50/90 is a Computerized Digital Ignition (CDI). There is no maintenance required for this type of system.

Chassis

The chassis is constructed of mild steel tubing. If any frame repairs are necessary, oxyacetylene welding can be used. If wire feed or arc welding is used, use extreme care and disconnect the battery while welding.

Set-Up Procedure

The following instructions provide a general overview of the procedures needed to properly set-up and deliver the ATV-50/90 to the retail customer.

1. Take out the battery and fill with acid. Pre-charging the battery will extend it's life. The preparation and charge prcedure is based on the battery's instruction.

2. Install the rear wheels and parts in the following order:
   A. 14 x 40 x 4.5mm washer (big)
   B. 14 x 26 x 3mm washer (small)
   C. 14mm hex-bolt (torque 450-550kg-cm, 44-54N-m)
   D. Cotter pin (open up the end after installed)
   E. Rubber cap

3. Install the front wheels and parts in the following order:
   A. 13 x 21 x 4mm washer (small)
   B. 12 x 40 x 4.5mm washer (big)
   C. 12mm hex-bolt (torque 300-350kg-cm, 29.5-34N-m)
   D. Cotter pin (open up the end after installed)
   E. Rubber cap

4. Set the handle bar into the lock-pin of the steering base. Tighten-up the 4 hex-socket bolts. Install the handle bar cover onto the handle bar, making sure the cables and wires are adjusted properly.

5. Pull the seat-lock cable and remove the seat. Install the battery with the red wire to positive (+), and the black wire to negative (-).

6. Remove the oil tank cap and fill with 2 stroke oil (TC 2, TC 3, TC W3) of a synthetic and low-smoke type. Add enough gasoline to fuel tank to operate. Be sure the arrow mark on the fuel valve arm (petcock) is set to the correct position (on).

7. Install the front bumper

8. Turn on the main switch and try to start up the engine. In order to use the electric starter, you need to check the following:
   A. Turn on the engine operation switch located on the left handle bar.
   B. Pull the rear brake lever.
   C. Push the electric starter button.

9. If the vehicle is operating in a very dusty area, please add more oil on the air cleaner filter.

PDI (PRE-DELIVERY INSPECTION) FOR ATV-50/90

- ☐ 1. Record the frame and engine number into the owner's manual.
- ☐ 2. Check that all tires have correct pressure specified on the tire or in the owner's manual.
- ☐ 3. Engine lubrication oil (2 stroke Grade TC 2, TC 3, TC W3) tank is filled.
- ☐ 4. Battery is installed properly.
- ☐ 5. All brake cables are adjusted properly.
- ☐ 6. Fuel tank has enough gasoline to operate.
- ☐ 7. Check the suspension and drive chain for proper set-up.
- ☐ 8. Check that all electrical components are working properly.
- ☐ 9. Make sure that the owner's manual and tool bag are installed under the seat.

If there are any other questions, please check the owner's manual for details.

CAUTION: Before installing the front rim, be aware that the stopper (1) of the front brake plate assembly must fit into the front knuckle plate (2)

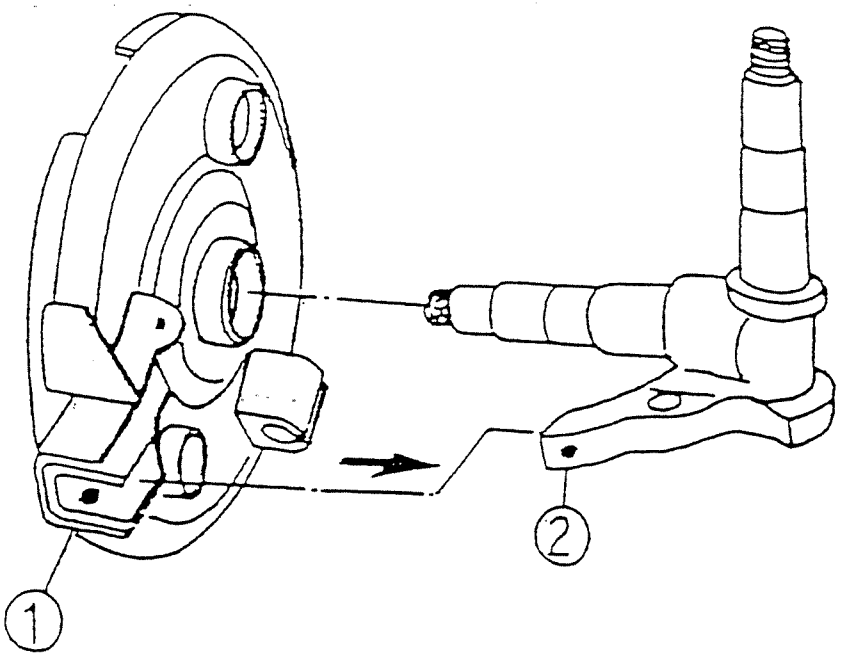

☆ ☆ CONTENTS ☆ ☆

DESCRIPTION	PAGE
CYLINDER, CYLINDER HEAD	2
CRANKSHAFT, PISTON	4
FAN, AIR SHROUD	6
OIL PUMP	8
REED VALVE, AIR CLEANER	10
CARBURETOR	12
EXHAUST	14
CRANKCASE	16 - 18
STARTER	20
CLUTCH	22
TRANSMISSION	24
GENERATOR, STARTING MOTOR	26
FRAME BODY	28
ARM, FLOOR PANEL, BUMPER	30
BODY COVER, SEAT	32
FUEL TANK, OIL TANK	34
FRONT WHEEL, SUSPENSION	36
REAR WHEEL	38
FRONT BRAKE	40
REAR BRAKE	42
HANDLE BAR	44
REAR WHEEL AXLE, CHAIN	46
STEERING	48
ELECTRICAL PARTS	50

CYLINDER,CYLINDER HEAD

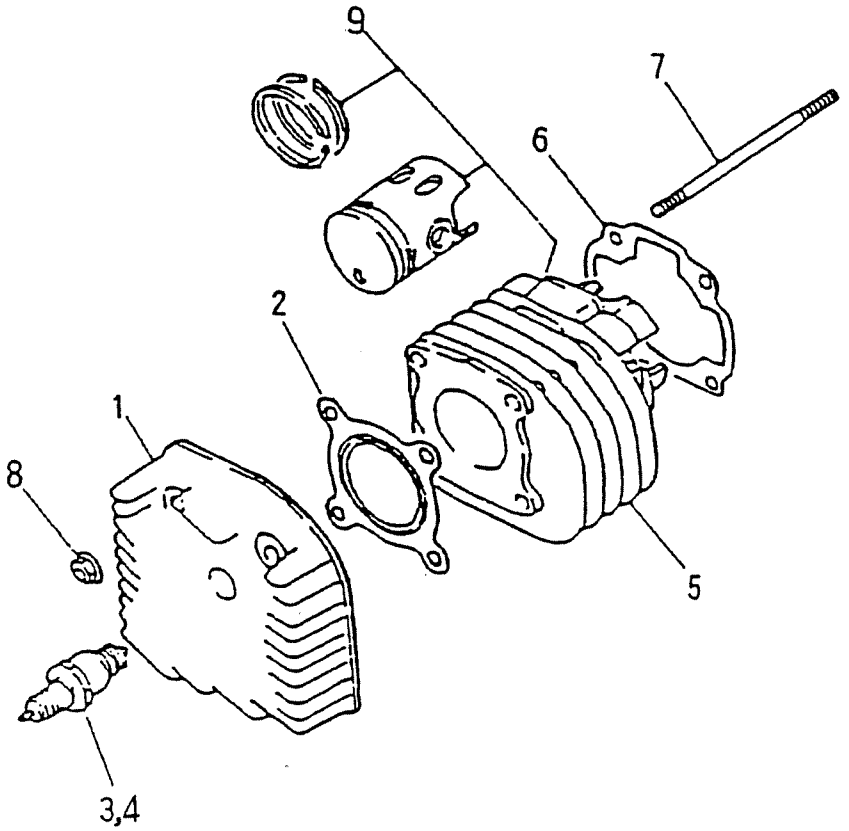

CYLINDER, CYLINDER HEAD

Item No.	Manco No.	Parts No.	Unit Qty	Description	
1	80000	12201-116-000	1	CYLINDER HEAD	
2	80001	12251-116-000	1	CYLINDER HEAD GASKET	
3	80002	98076-101-000	1	SPARK PLUG	NGK BP7HS
4	**	98076-101-00A	1	RESISTANCE SPARK PLUG	
5	80004	12101-116-000	1	CYLINDER	
6	80005	12191-116-000	1	CYLINDER GASKET	
7	80006	91001-07110	4	STUD BOLT	7X110
8	80007	94050-07000	4	HEX FLANGE NUT W/ SERRATION	7MM
9	80008	12301-116-000	1	CYLINDER COMPLETE	
NI	80474	34100-145-000	1	ENGINE ASM - 50CC	not illustrated

CRANKSHAFT, PISTON

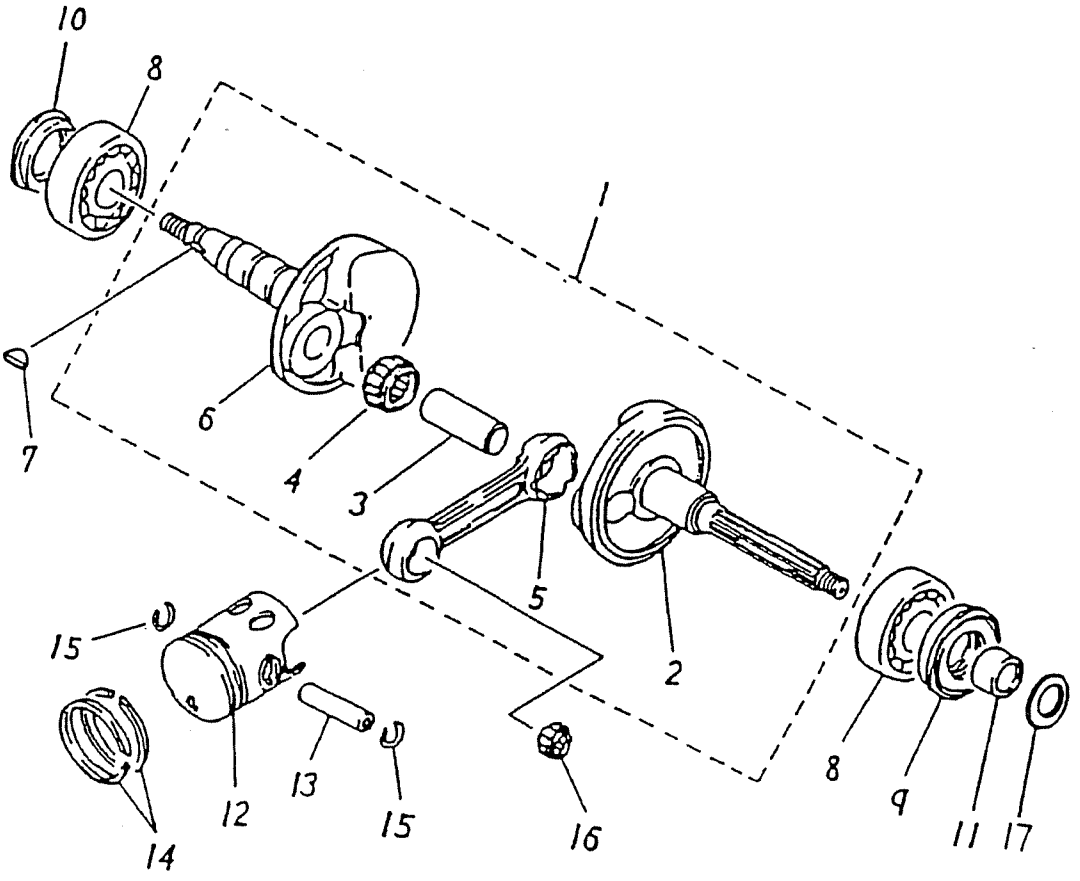

CRANKSHAFT, PISTON

Item No.	Manco No.	Parts No.	Unit Qty	Description	
1	80009	13000-116-000	1	CRANKSHAFT ASSY	
2	80010	13321-116-000	1	LEFT CRANK	
3	80011	13381-104-000	1	CRANK PIN	
4	80012	96200-162212	1	NEEDLE BEARING	16X22X12
5	80013	13201-104-000	1	CRANK CONNECTING ROD	
6	80014	13311-116-000	1	RIGHT CRANK	
7	80015	90471-104-000	1	SEMICYCLE KEY	3X13
8	80016	96100-62040	2	RADIAL BALL BEARING	6204C3
9	80017	96500-20428	1	OIL SEAL	20X42/43X8/9
10	80018	96500-20306	1	OIL SEAL	20X30/33X6
11	80019	13316-116-000	1	LEFT CRANK COLLAR	15X20X12
12	80020	13100-116-000	1	PISTON	
13	80021	13111-104-000	1	PISTON PIN	7X10X33
14	80022	13011-116-000	1	PISTON RING SET	STD
15	80023	13115-104-000	2	PISTON PIN CLIP	1.0X12
16	80024	96200-101412	1	NEEDLE BEARING	10X14X12.5
17	80025	94101-1319005	1	PLAIN WASHER	13X19X0.5

FAN,AIR SHROUD

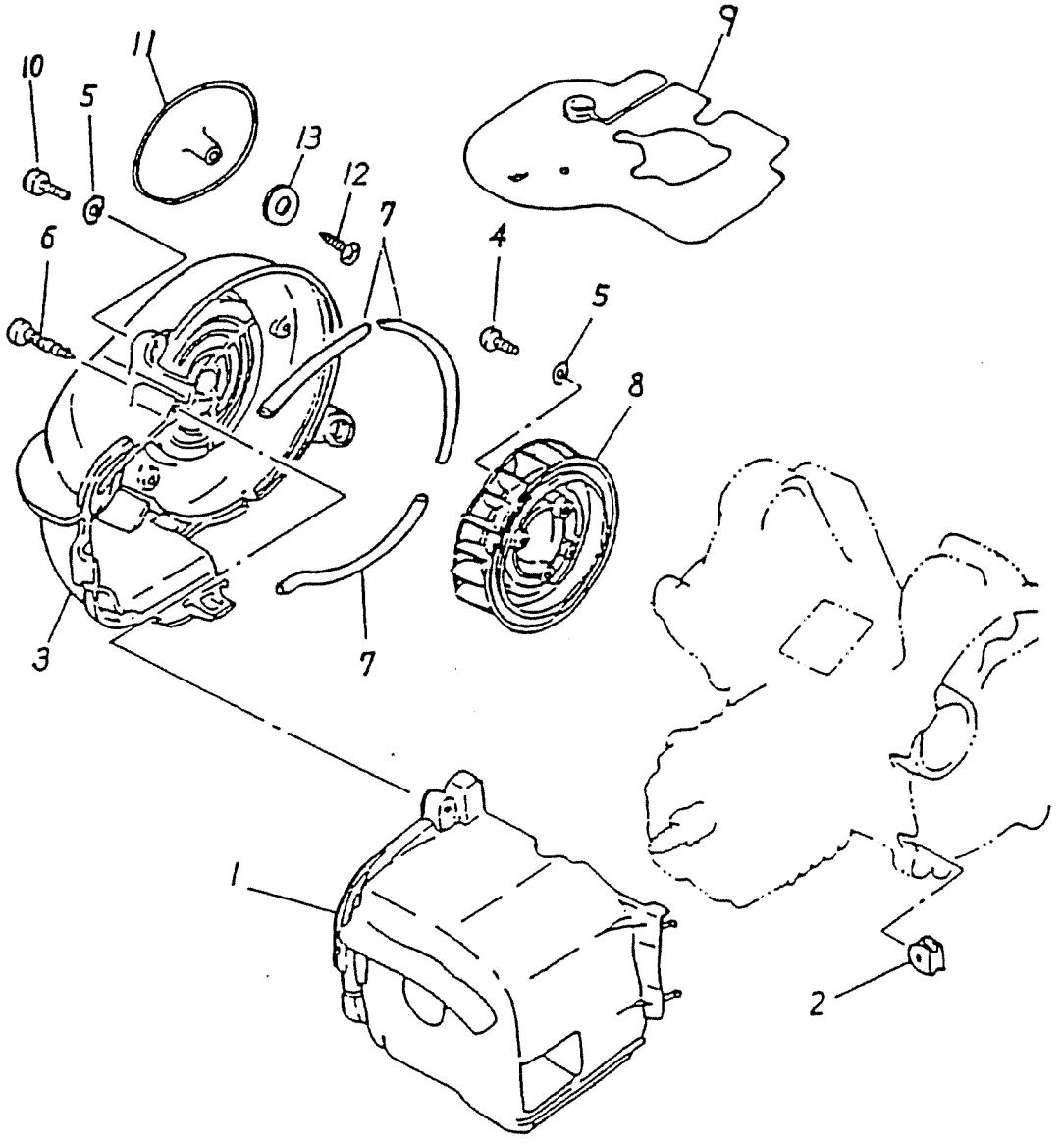

FAN, AIR SHROUD

Item No.	Manco No.	Parts No.	Unit Qty	Description	
1	80026	19620-116-000	1	CYLINDER AIR SHROUD	
2	80027	83552-116-000	2	GROMMET	
3	80028	19610-116-000	1	GENERATOR COVER	
4	80029	91000-06015	4	HEX SOCKET BOLT	6X15
5	80030	94101-0613010	6	PLAIN WASHER	6X13X1
6	**	93903-05040	1	TAP. SCREW TRUSS HEADPHILLIPS	5X40
7	80032	17632-116-000	2	DAMPER	
8	80033	19510-116-000	1	FAN	
9	80034	55122-116-000	1	DEFLECTOR	
10	80035	91000-06020	2	HEX SOCKET BOLT	6X20
11	80036	19612-145-000	1	GENERATOR OUTTER COVER	
12	**	93903-05016	1	TAP. SCREW TRUSS HEAD PHILLIPS	5X16
13	**	94101-0618010	1	PLAIN WASHER	6X18X1

OIL PUMP

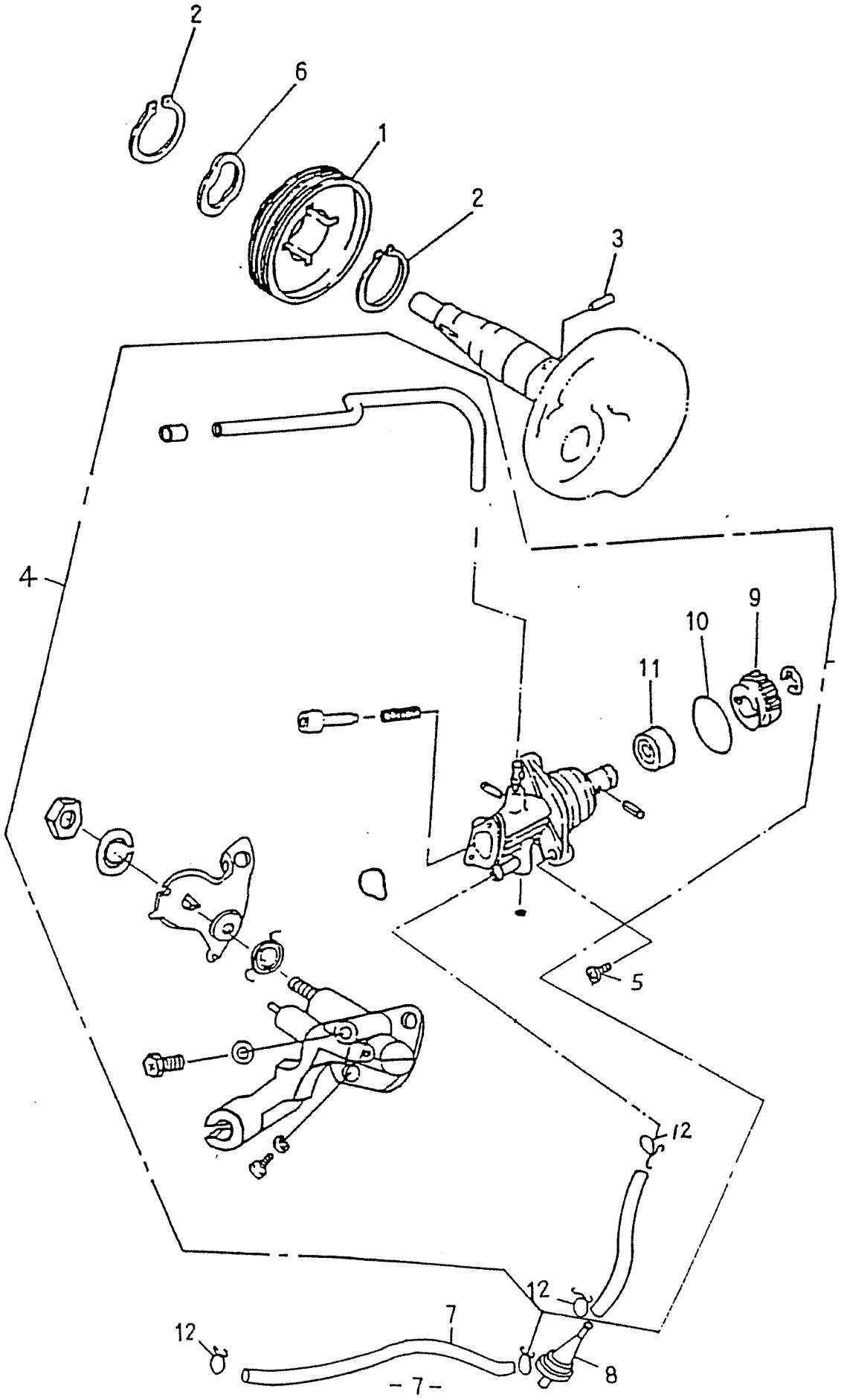

OIL PUMP

Item No.	Manco No.	Parts No.	Unit Qty	Description	
1	80039	15150-104-000	1	PUMP DRIVE GEAR	
2	80040	94511-1900S	2	EXTERNAL CIR CLIP	STW-19
3	80041	96300-030118	1	CRANK SHAFT PIN	3X11.8
4	80042	15100-116-000	1	OIL PUMP ASSY	
5	**	93500-05015	2	PAN PHILLIPS BOLT	5X15
6	80044	15151-104-000	1	WAVE WASHER	19.2X26X0.3
7	80045	94400-0408490	1	TUBE	4.8X8X490
8	80046	17502-101-000	1	OIL FILTER CUP	
9	80047	15136-110-000	1	OIL PUMP WORMWHEEL	40T
10	80048	91319-110-000	1	OIL RING	19.3X16
11	80049	96500-09164	1	OIL SEAL	9.5X16X4
12	80050	94510-08000	4	CLIP	8X0.8

REED VALVE.AIR CLEANER

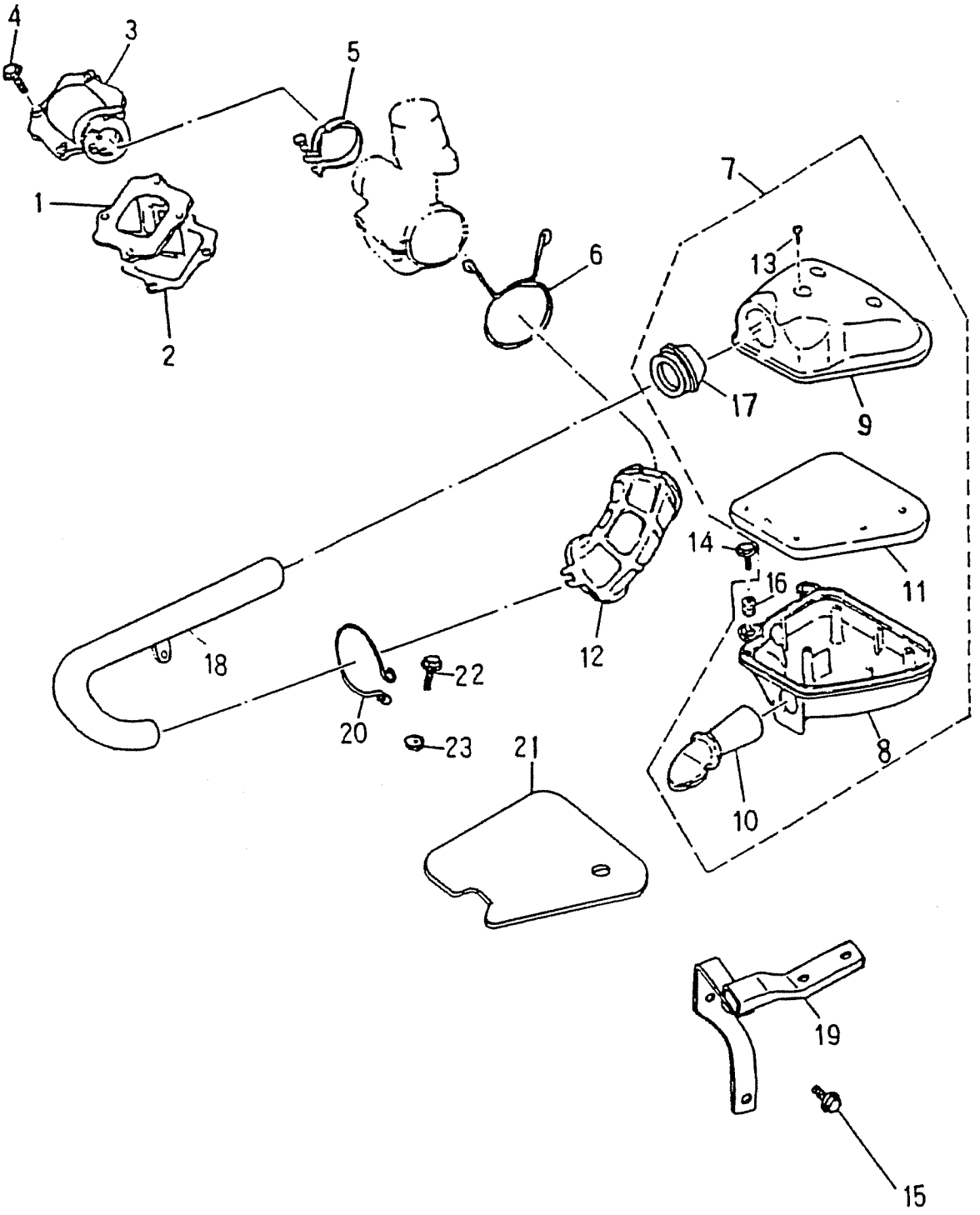

REED VALVE, AIR CLEANER

Item No.	Manco No.	Parts No.	Unit Qty	Description	
1	80051	14100-116-000	1	REED VALVE ASSY	
2	80052	17111-116-000	1	REED VALVE GASKET	
3	80053	17100-116-000	1	INTAKE MANIFOLD (3XG)	
4	80054	96000-06018-08	4	HEX WASHER FACE BOLT	6X18
5	80055	14110-104-000	1	INTAKE MANIFOLD HOSE CLAMP	
6	80056	94510-40000	1	CLIP	40X2.3
7	80057	17200-145-000	1	AIR CLEANER ASSY	
8	**	17206-116-000	1	AIR CLEANER BASE	
9	**	17207-116-000	1	AIR CLEANER COVER	
10	80060	17219-116-000	1	GUIDE PIPE	
11	80061	17205-116-000	1	AIR CLEANER ELEMENT	
12	80062	17253-116-000	1	AIR CLEANER JOINT	
13	80063	93903-05025	3	TAP. SCREW TRUSS HEAD PHILLIPS	5X25
14	80064	92000-06020-10	2	HEX BOLT	6X20
15	80065	96000-08020-12	1	HEX WASHER FACE BOLT	8X20
16	80066	96485-116-000	2	GROMMET	
17	80067	17254-145-000	1	AIR CLEANER CONNECTION	
18	80068	17257-145-000	1	AIR DUCT	
19	80069	17260-145-000	1	AIR CLEANER BRACKET	
20	80070	94510-45000	1	CLIP	45X2
21	80071	17220-145-000	1	AIR CLEANER ISOLATION GASKET	
22	80072	96000-05024-08	1	HEX WASHER FACE BOLT	5X24
23	80073	94050-05000	1	HEX FLANGE NUT W/SERRATION	5MM

CARBURETOR

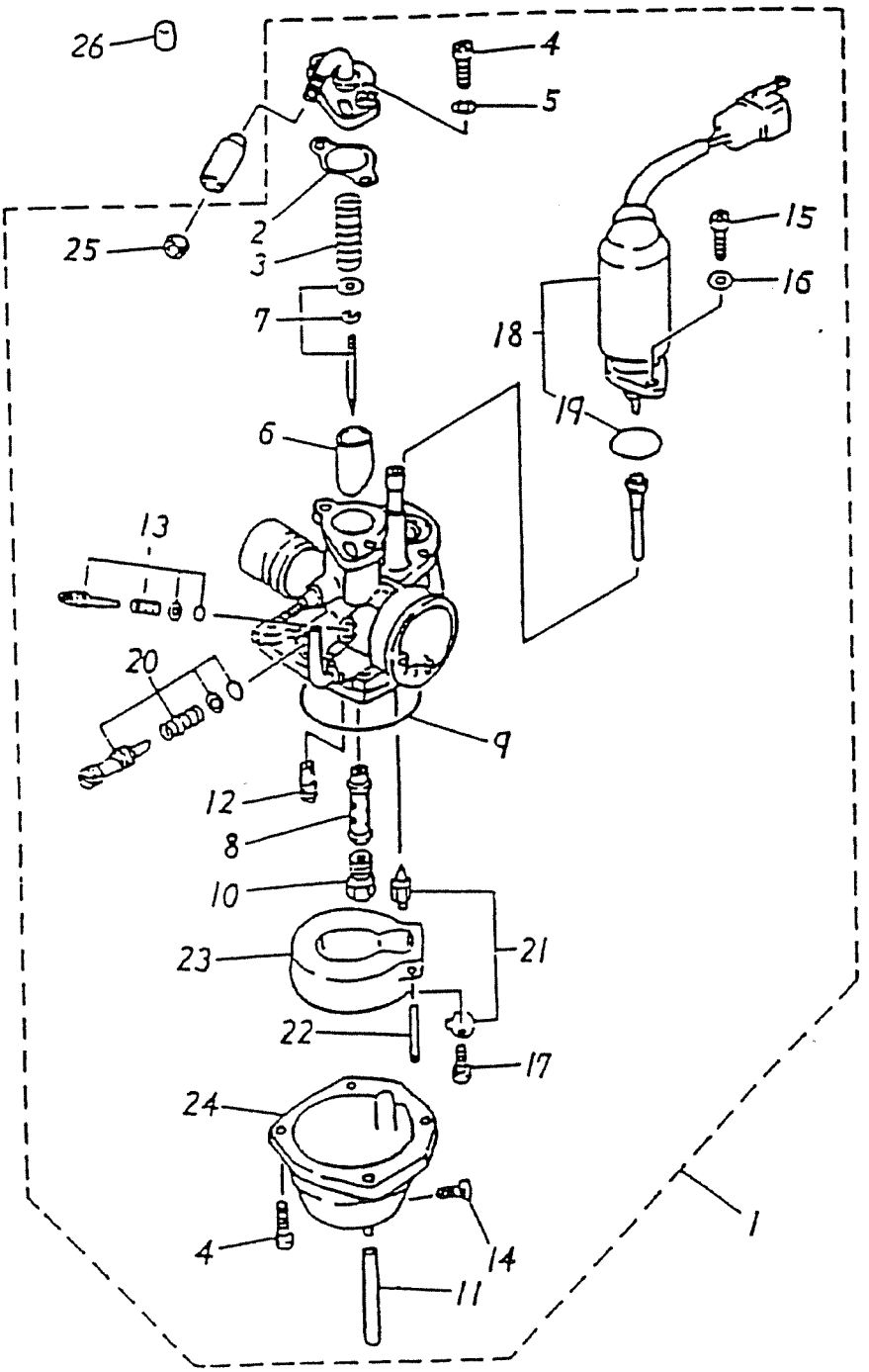

CARBURETOR

Item No.	Manco No.	Parts No.	Unit Qty	Description	
1	80074	16100-116-00A	1	CARBURETOR ASSY	
2	80075	16101-116-000	1	CARBURETOR GASKET	
3	80076	16102-116-000	1	THROTTLE VALVE SPRING	
4	80077	93500-04014	6	PAN PHILLIPS BOLT	4X14
5	80078	94111-0407010	2	SPRING WASHER	4X7X1
6	80079	16103-116-000	1	THROTTLE VALVE	
7	80080	16104-116-000	1	NEEDLE SET	
8	80081	16105-116-000	1	NEEDLE NOZZLE	
9	80082	16106-116-000	1	FLOAT CHAMBER SEAL	
10	80083	16108-116-000	1	MAIN NOZZLE	(#75)
11	80084	16109-116-000	1	OVER FLOW TUBE	4X7
12	80085	16110-116-000	1	PILOT JET	#17.5
13	80086	16115-116-000	1	AIR ADJUST SCREW SET	
14	80087	16111-116-000	1	DRAIN PLUG	
15	80088	93500-04008	2	PAN PHILLIPS BOLT	4X8
16	80089	94111-0406510	2	SPRING WASHER	4X6.5X1
17	80090	93500-03008	1	PAN PHILLIPS BOLT	3X6
18	80091	17215-116-000	1	PLUNGER STARTER	
19	80092	91314-116-000	1	OIL RING	14X1.5
20	80093	16114-116-000	1	THROTTLE SCREW SET	
21	80094	16117-116-00A	1	NEEDLE VALVE ASSY	
22	80095	16119-116-000	1	FLOAT PIN	
23	80096	16118-116-000	1	FLOAT	
24	80097	16107-116-000	1	FLOAT CHAMBER	
25	80098	16113-116-000	1	CABLE ADJUST NUT	
26	80099	42615-145-000	1	PURGE HOLE PLUG	

EXHAUST

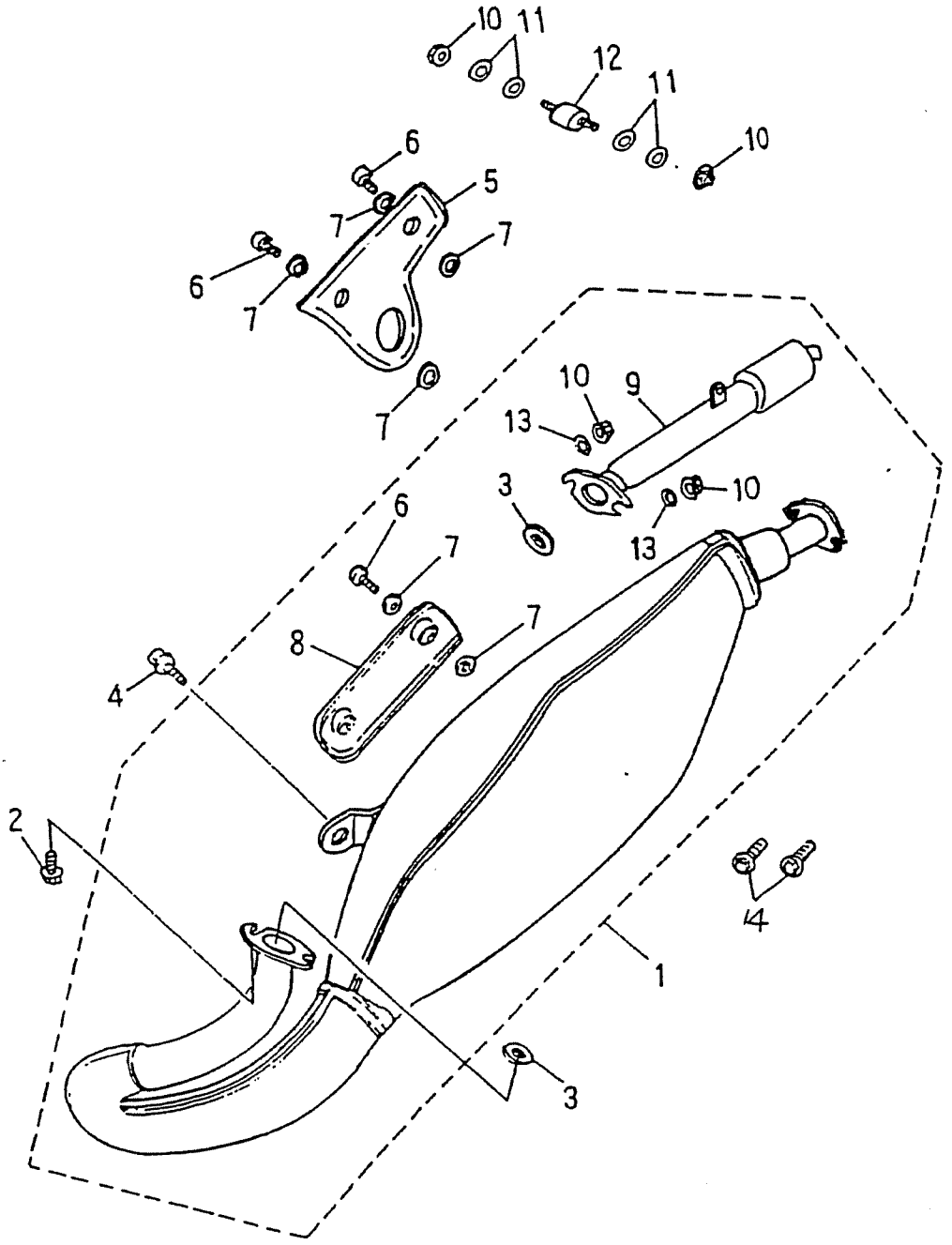

EXHAUST

Item No.	Manco No.	Parts No.	Unit Qty	Description	
1	80100	18300-145-001	1	EXHAUST PIPE ASSY	
2	80101	92001-06018-10	2	HEX HEAD PHILLIPS BOLT	6X18
3	80102	18291-104-000	2	EXHAUST PIPE GASKET	
4	80103	96000-08020-12G	1	HEX WASHER FACE BOLT	8X20
5	80104	18301-145-000	1	INSOLATOR	
6	80105	96000-06012-08	4	HEX WASHER FACE BOLT	6X12
7	80106	18292-104-000	8	MUFFLER SHROUD PACKING	6MM
8	80107	18318-145-000	1	MUFFLER SHROUD	
9	80108	18321-145-001	1	SILENCER MUFFLER	
10	80109	94050-06000	4	HEX FLANGE NUT W/SERRATION	6MM
11	80110	94101-0619010	4	PLAIN WASHER	6X19X1
12	80111	18305-145-000	1	RUBBER DAMPER	
13	80112	94101-0614020	2	PLAIN WASHER	6X14X2
14	80113	96000-06025-10	2	HEX WASHER FACE BOLT	6X25
	80526	18311-145-000	1	FRONT EXHAUST PIPE ONLY	
NI	80565	18322-145-000	1	COVER - SPARK ARRESTOR ATV	
NI	80566	18323-145-000	1	SCREEN - SPARK ARRESTOR ATV	
NI	80567	93903-04008	1	SELF TAPPING SCREW	3MMX12MM

CRANKCASE

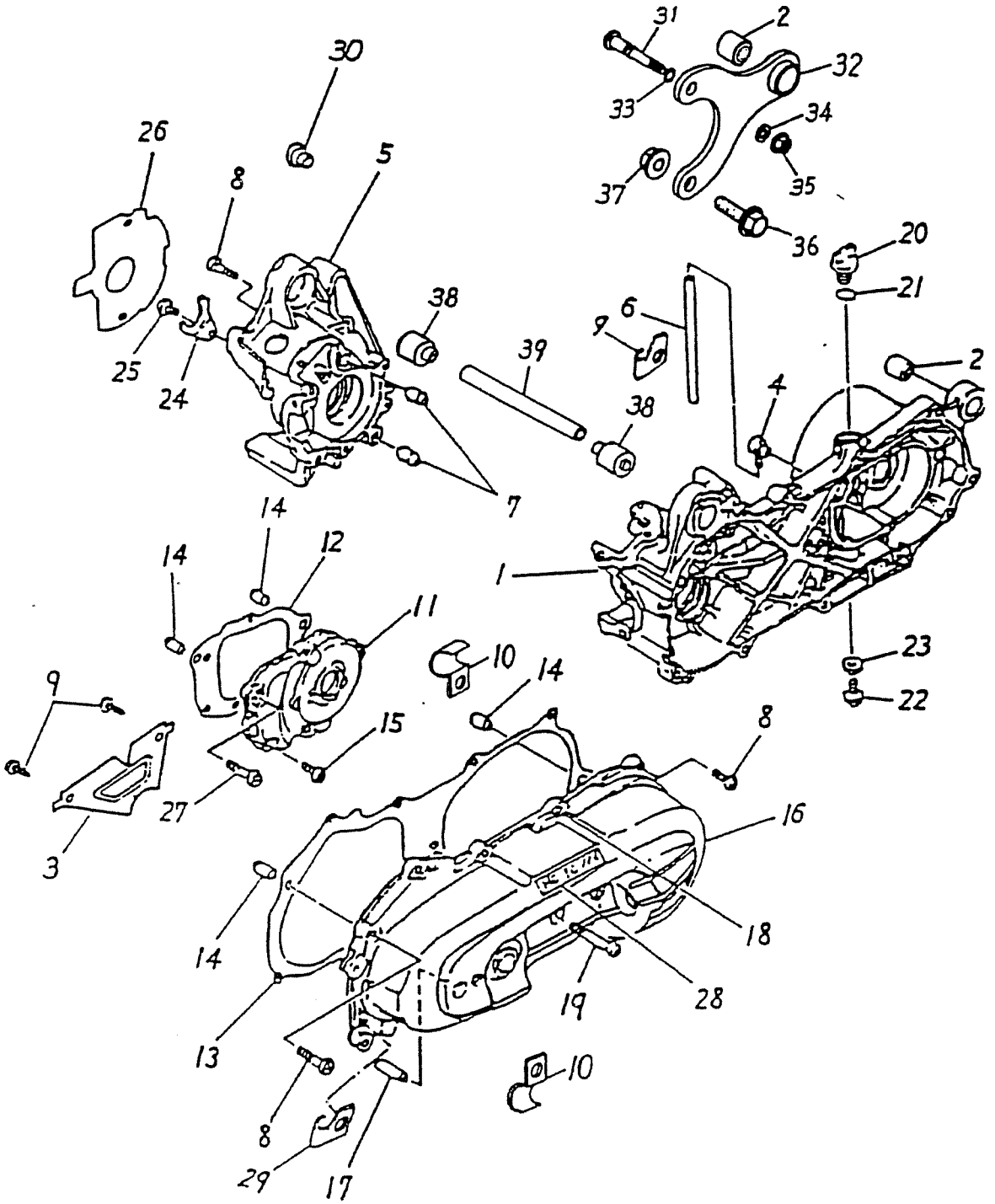

31
2
32
33
34
35
37
36
30
26
8
5
20
21
38
6
9
39
2
25
24
4
38
7
14
12
14
1
11
10
14
23
22
9
15
8
27
16
3
18
14
28
19
13
10
8
29
17

CRANKCASE

Item No.	Manco No.	Parts No.	Unit Qty	Description	
1	80114	11201-116-000	1	LEFT CRANKCASE	
2	80115	96400-082020	2	RUBBER BUSHING	8X20X20
3	80116	11342-116-000	1	PLATE L. COVER	
4	80117	16610-104-000	1	BREATHER HOSE HEAD	
5	80118	11101-116-000	1	RIGHT CRANKCASE	
6	80119	16615-104-000	1	BREATHER HOSE	
7	80120	94301-12160	2	DOWEL PIN	8.5X12X16
8	80121	91000-06035	8	HEX SOCKET BOLT	6X35
9	**	93903-04008	2	TAP. SCREW TRUSS HEAD PHILLIPS	4X8
10	80123	11351-120-00A	2	CLAMP	
11	80124	21301-116-000	1	MISSION COVER	
12	80125	21395-116-000	1	MISSION COVER GASKET	
13	80126	11359-116-000	1	CRANKCASE COVER GASKET	
14	80127	94301-10140	4	DOWEL PIN	8X10X14
15	80035	91000-06020	3	HEX SOCKET BOLT	6X20
16	80129	11341-116-000	1	LEFT CRANKCASE COVER	
17	80130	96300-080320	1	SHAFT IDLER	8X32
18	80131	91000-06025	9	HEX SOCKET BOLT	6X25
19	80132	91000-06060	1	HEX SOCKET BOLT	6X60
20	80133	15650-110-000	1	OIL PLUG	
21	80134	91312-104-000	1	OIL RING	11.8X2.6
22	80135	96000-08015-12	1	HEX WASHER FACE BOLT	8X15
23	80136	84101-0813010	1	COPPER PLAIN WASHER	8X13X1
24	80137	11111-104-000	1	OIL SEAL BRACKET	
25	80138	91000-06010	1	HEX SOCKET BOLT	6X10
26	80139	11121-116-000	1	GENERATOR GASKET	
27	80140	91000-06030	2	HEX SOCKET BOLT	6X30
29	80142	11351-104-000	2	CARBURETOR TUBE BRACKET	
30	80143	11102-116-000	1	PROTECT SHROUD	
31	80529	45110-145-000	1	FIX SHAFT	

CRANKCASE

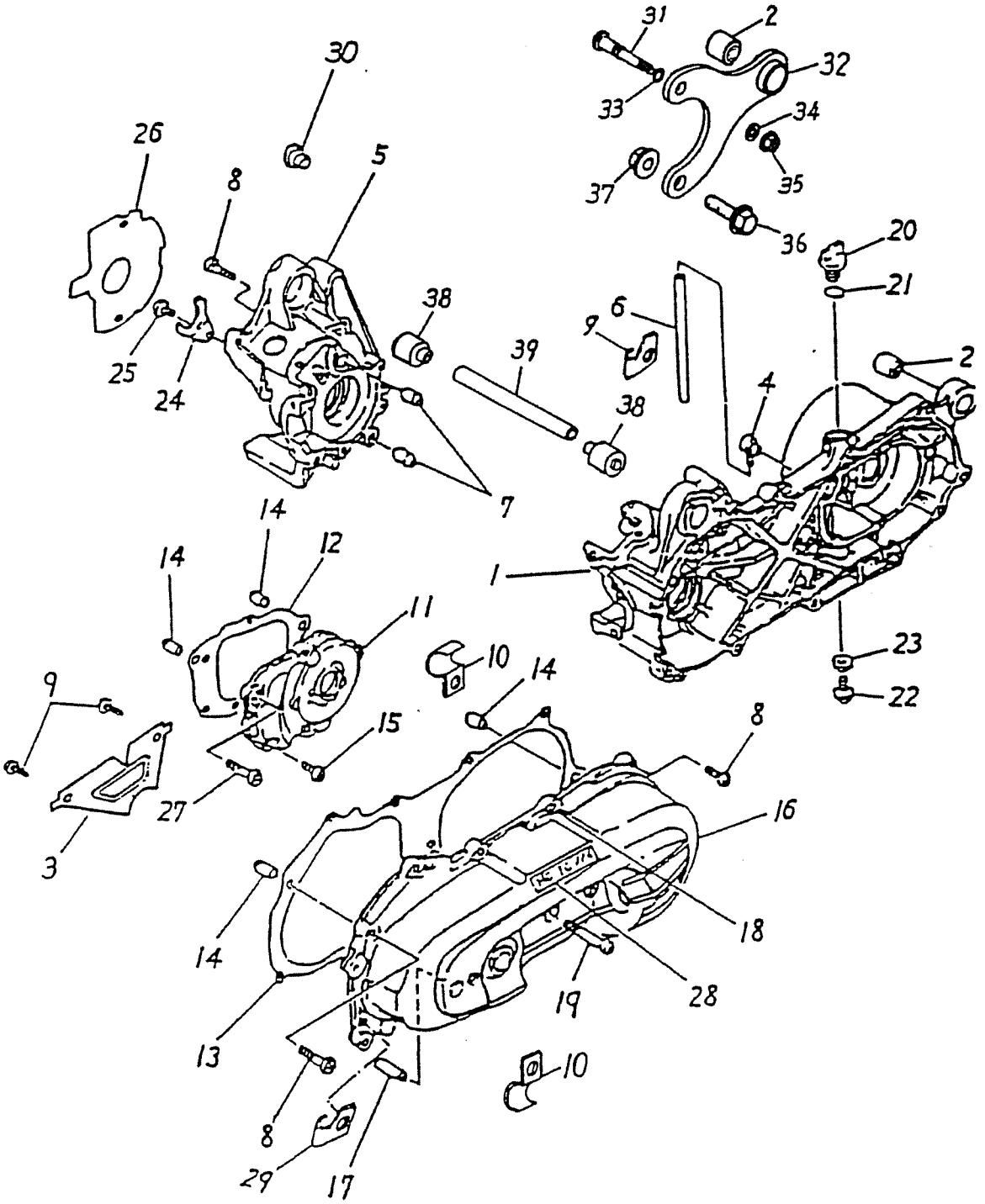

31
2
32
33
34
35
37
36
30
26
8
5
20
21
38
6
9
39
2
25
24
4
38
7
14
12
14
1
11
10
14
23
22
9
15
8
27
16
3
18
14
28
19
13
10
8
29
17

CRANKCASE CONT.

Item No.	Manco No.	Parts No.	Unit Qty	Description	
32	80144	11202-145-000	1	CRANKCASE BRACKET	
33	80145	91307-101-000	1	OIL RING	7.5X1.5
34	**	94101-0815015	1	PLAIN WASHER	8X15X1.5
35	80147	94050-08000	1	HEX FLANGE NUT W/SERRATION	8MM
36	80148	96000-12040-17	1	HEX WASHER FACE BOLT	12X40
37	80149	94050-12000	1	HEX FLANGE NUT W/SERRATION	12MM
38	80150	11203-145-000	2	BUSH	10.2X35X23/34
39	80151	11150-145-000	1	CRANKCASE FIX SHAFT	114MM

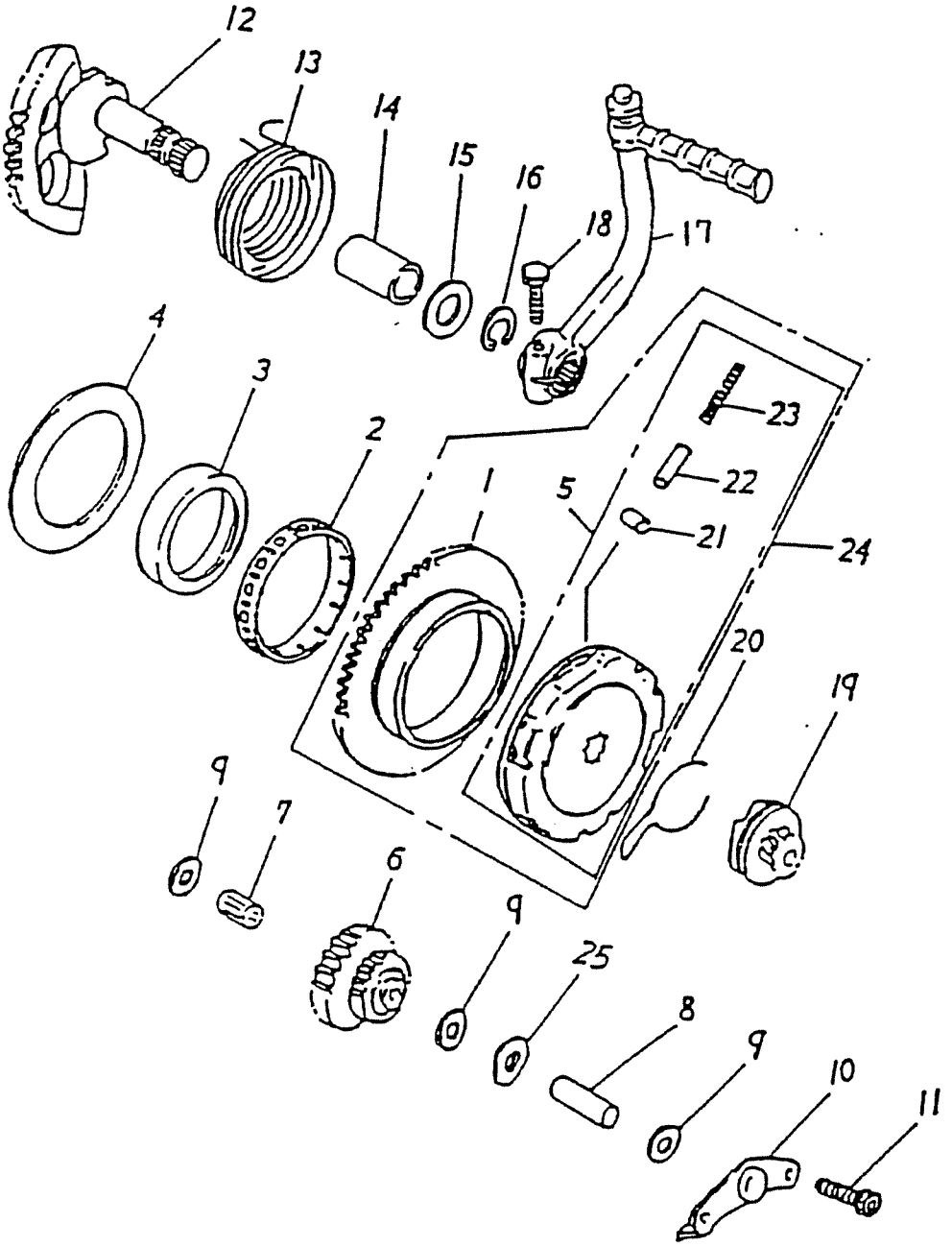
12
13
14
15
16
18
17
4
3
2
1
5
23
22
21
24
20
19
9
7
6
9
25
8
9
10
11

STARTER

Item No.	Manco No.	Parts No.	Unit Qty	Description	
1	80152	28220-116-000	1	STARTER WHEEL	
2	80153	96200-555912	1	NEEDLE BEARING	55X59X12.5
3	80154	96202-116-000	1	BOSS	
4	80155	94101-5676006	1	PLAIN WASHER	56X76X.0.6
5	80156	28410-116-000	1	ELECTRIC STARTER CLUTCH SET	
6	80157	23422-116-000	1	IDLER GEAR	
7	80158	96200-081210	1	NEEDLE BEARING	HK8X12X10
8	80130	96300-080320	1	SHAFT IDLER	8X32
9	80160	94101-0818008	3	PLAIN WASHER	8.2X18X0.8
10	80161	11206-116-000	1	IDLER GEAR PLATE	
11	80138	91000-06010	2	HEX SOCKET BOLT	6X10
12	80163	28250-116-000	1	STARTING SHAFT ASSY	
13	80164	28281-110-000	1	STARTING SHAFT RESET SPRING	
14	80165	96401-152030	1	BUSHING	15X20X30
15	80166	94101-1528010	1	PLAIN WASHER	15.2X28X1
16	80167	94511-1500S	1	EXTERNAL CIR CLIP	STW-15
17	80168	28300-145-000	1	KICK CRANK ASSY	
18	80113	96000-06025-10	1	HEX WASHER FACE BOLT	6X25
19	80170	28230-104-000	1	KICK PINION ASSY	
20	80171	28223-104-000	1	KICK PINION SPRING CLIP	
21	80172	28411-116-000	3	CLUTCH ROLLER	6X7
22	80173	28412-116-000	3	CLUTCH GUIDER	
23	80174	28413-116-000	3	CLUTCH SPRING	
24	80175	28400-116-000	1	ELECTRIC STARTER CLUTCH ASSY	
25	80176	92022-851618	1	WAVE WASHER	8.5X16X1.8

CLUTCH

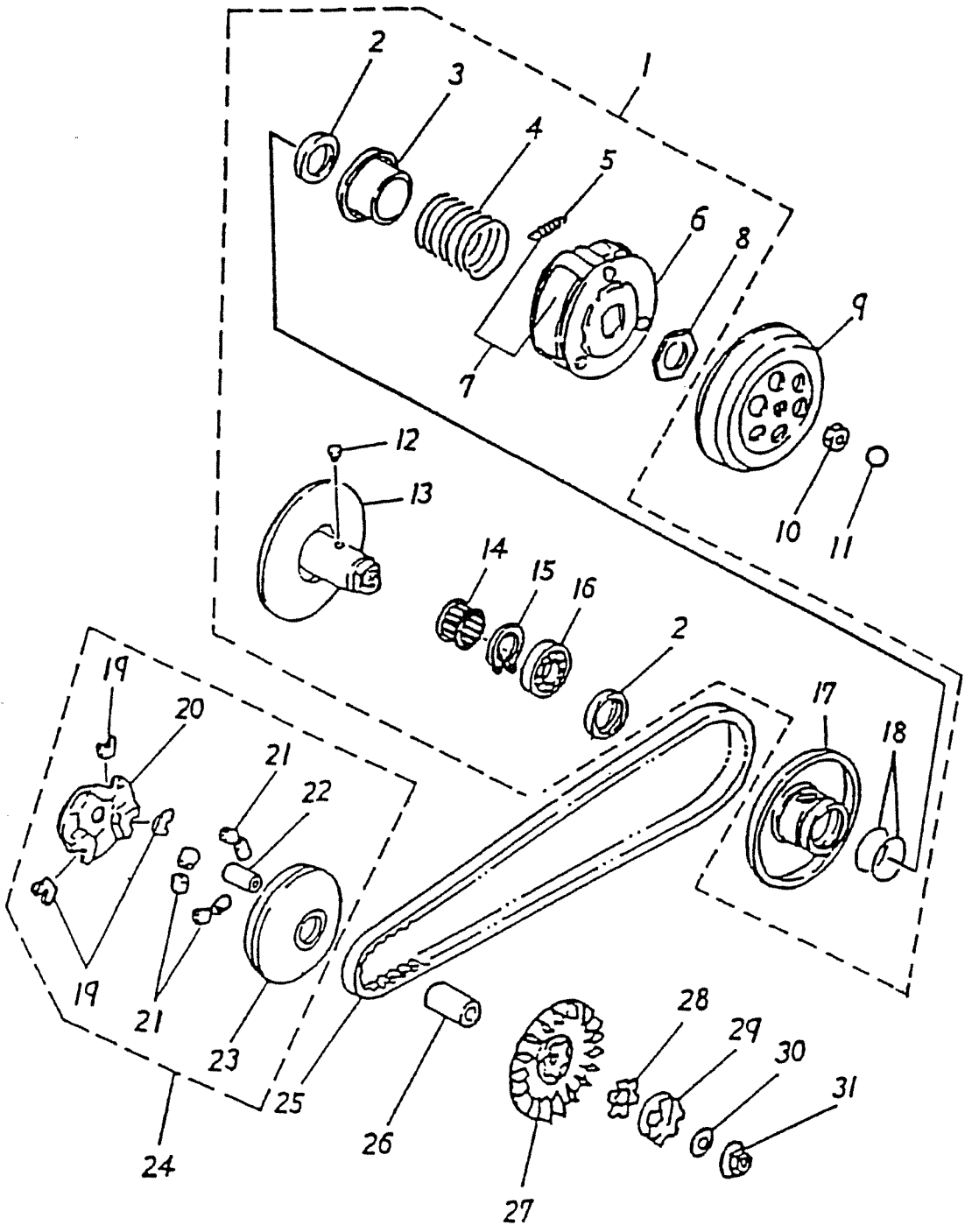
1
2
3
4
5
6
7
8
9
10
11
12
13
14
15
16
2
17
18
19
20
21
22
19
21
23
25
24
26
27
28
29
30
31

CLUTCH

Item No.	Manco No.	Parts No.	Unit Qty	Description	
1	80177	22000-116-000	1	DRIVE FACE ASSY	B
2	80178	96500-33394	2	OIL SEAL	33X39X4
3	80179	23237-116-000	1	SECONDARY SPRING SEAT	
4	80180	23233-116-000	1	COMPRESSION SPRING	
5	80181	22401-116-000	3	CLUTCH WEIGHT SPRING	
6	80182	22350-116-000	1	CLUTCH CARRIER	
7	80183	22535-116-000	1	CLUTCH WEIGHT SET	
8	80184	90202-116-000	1	NUT	28X38X4
9	80185	22100-116-000	1	CLUTCH COVER COMP	
10	80186	94001-10000	1	HEX NUT	10MM
11	80187	91313-104-000	1	OIL RING	12.5X3
12	80188	23225-116-000	2	GUIDE PIN	
13	80189	23200-116-000	1	SECONDARY FIX SLOT WHEEL	
14	80190	96200-172518	1	NEEDLE BEARING	HKS-17X25X18
15	80191	94512-240IR	1	INTERNAL CIR CLIP	IRTW-24
16	80192	96100-6901U	1	RADIAL BALL BEARING	6901LU
17	80193	23220-116-000	1	SECONDARY SLIDING SLOT WHEEL	
18	80194	91336-104-000	2	OIL RING	36X2
19	80195	22132-104-000	3	CAM PLATE SLIDER	
20	80196	22131-116-000	1	CAM PLATE	
21	80197	22121-116-000	6	WEIGHT ROLLER	
22	80198	96401-182322	1	BUSHING	18X23X22.5
23	80199	22110-116-000	1	PRIMARY SLIDING SLOT WHEEL	
24	80200	22103-116-000	1	SLIDING DRIVE FACE ASSY	A
25	80201	23100-117-000	1	V-BELT	
26	80202	96401-131838	1	BUSHING	13X18X38
27	80203	22102-116-000	1	PRIMARY FIX SHEAVE	
28	80204	22150-110-000	1	CLAW WASHER	
29	80205	22140-110-000	1	ONEWAY CLUTCH	
30	80206	22145-104-000	1	CONE SPRING WASHER	10.2X24X2.6
31	80207	94050-10000	1	HEX FLANGE NUT W/SERRATION	10MM

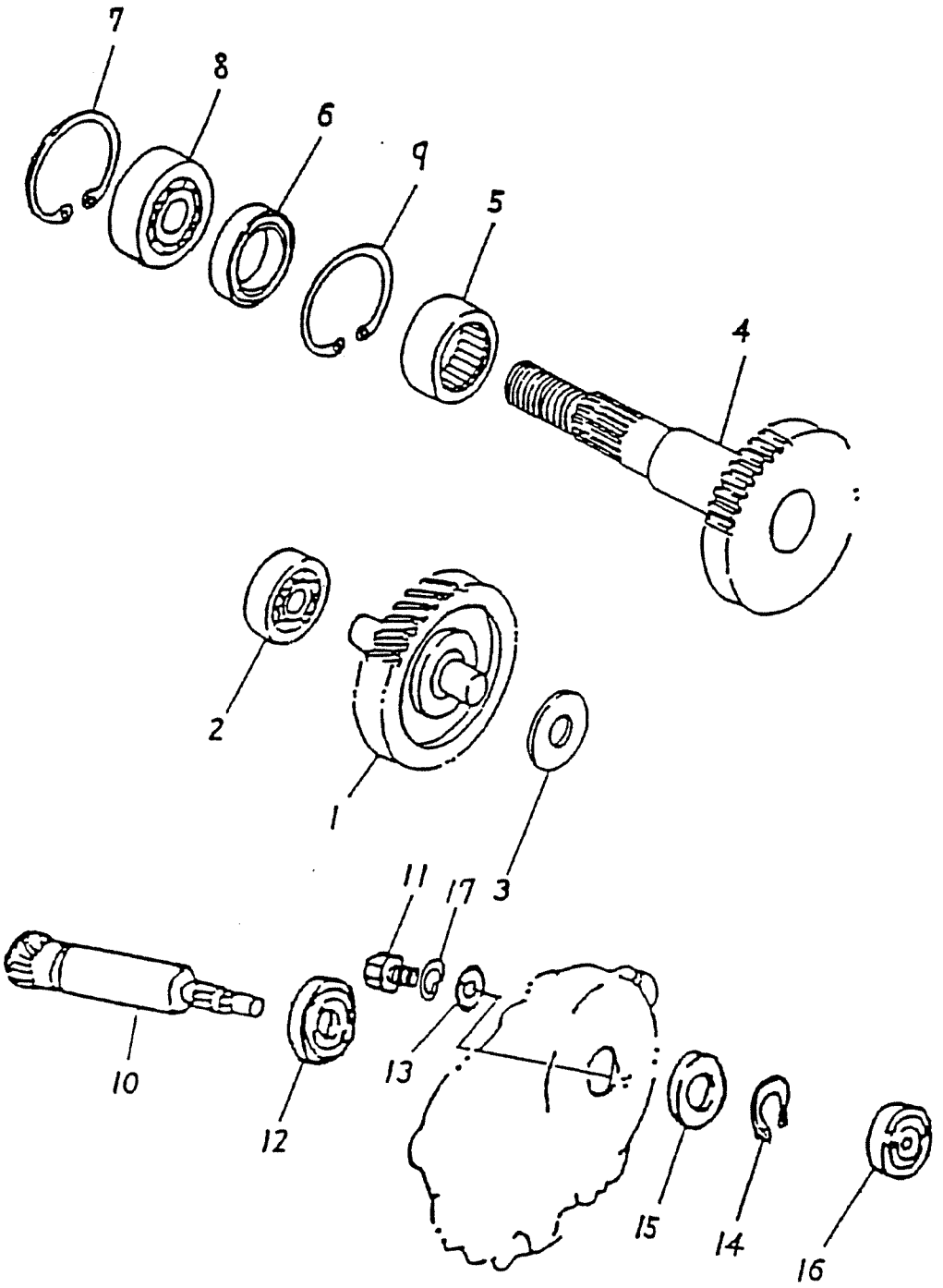
7
8
6
9
5
4
2
1
3
11
17
10
13
12
15
14
16

TRANSMISSION

Item No.	Manco No.	Parts No.	Unit Qty	Description	
1	80208	23420-116-000	1	MAIN AXLE COMP	48/12T
2	80209	96100-62010	1	RADIAL BALL BEARING	6201
3	80210	94101-1229016	1	PLAIN WASHER	12.2X29X1.6
4	80211	23430-116-000	1	DRIVE AXLE	36T
5	80212	96200-253315	1	NEEDLE BEARING	HMK2515
6	80213	96500-25356	1	OIL SEAL	25X35X6
7	80214	94512-4300R	2	INTERNAL CIR CLIP	RTW-43
8	80215	96100-604U	1	RADIAL BALL BEARING	6004 LU
9	80216	94512-3400R	1	INTERNAL CIR CLIP	RTW-34
10	80217	23411-116-000	1	PRIMARY DRIVE GEAR	13T
11	80218	92000-06010-10	1	HEX BOLT	6X10
12	80219	96100-60030	1	RADIAL BALL BEARING	6003
13	80220	94101-0620005	1	PLAIN WASHER	6X20X0.5
14	80221	94511-1700S	1	EXTERNAL CIR CLIP	STW-17
15	80222	96500-17285	1	OIL SEAL	17X28X5.5
16	80223	96100-638RD	1	RADIAL BALL BEARING	638RD
17	80224	94111-0612015	1	SPRING WASHER	6X12X1.5

GENERATOR.STARTIHG MOTOR

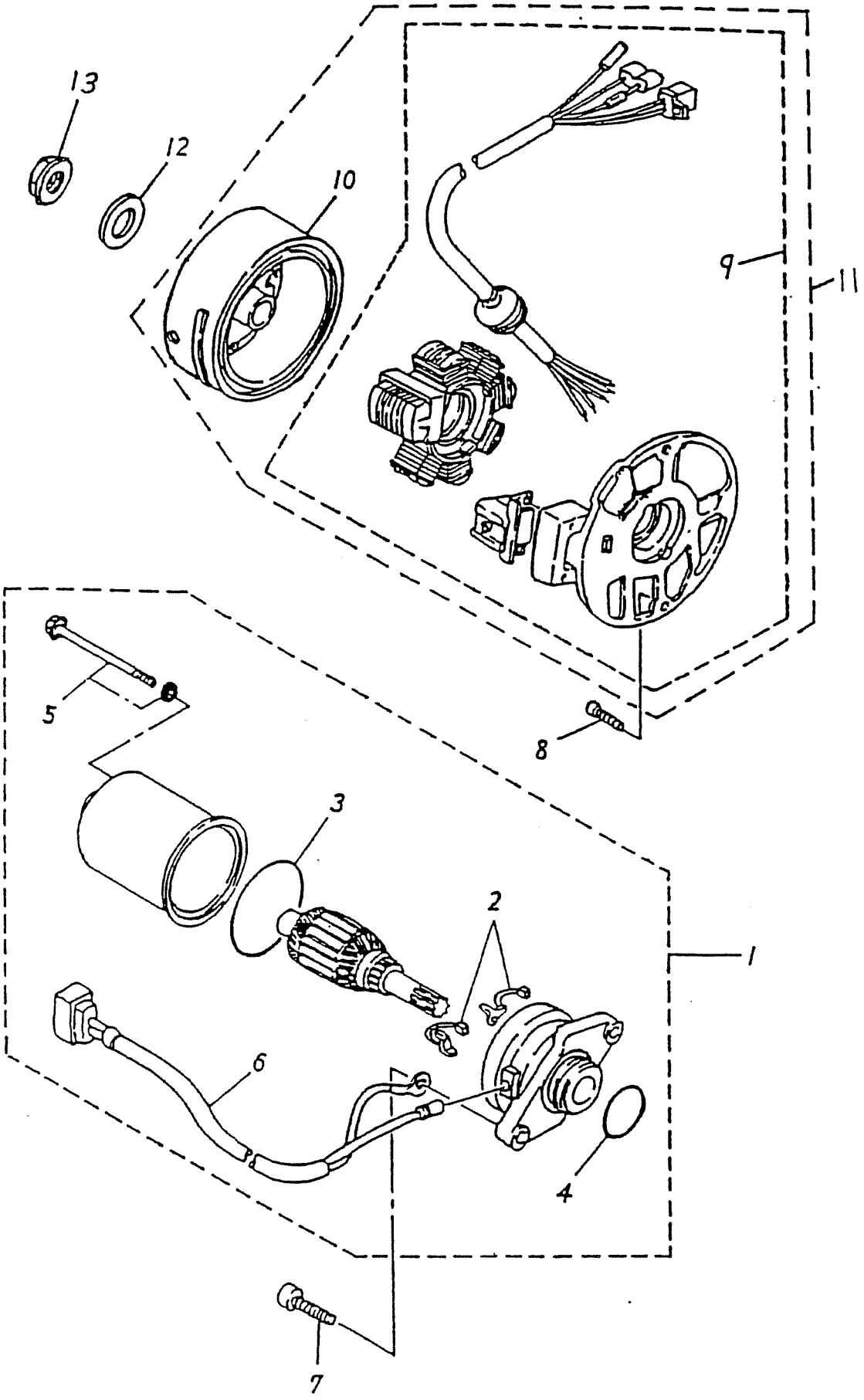

GENERATOR, STARTING MOTOR

Item No.	Manco No.	Parts No.	Unit Qty	Description	
1	80225	31200-116-000	1	STARTING MOTOR ASSY	
2	**	31201-104-000	1	BRUSH SET	
3	**	91342-104-000	1	OIL RING	42X1.5
4	**	91323-104-000	1	OIL RING	23X2
5	80229	90115-104-000	2	BOLT SET	
6	80230	31202-116-000	1	CORD COMP.	
7	80035	91000-06020	2	HEX SOCKET BOLT	6X20
8	80029	91000-06015	2	HEX SOCKET BOLT	6X15
9	80233	31120-116-000	1	STATOR COMP.	
10	80234	31110-116-000	1	GENERATOR FLYWHEEL	
11	80235	31100-116-000	1	GENERATOR ASSY	
12	80236	94101-1022020	1	PLAIN WASHER	10X22X2
13	80207	94050-10000	1	HEX FLANGE NUT W/SERRATION	10MM

FRAME BODY

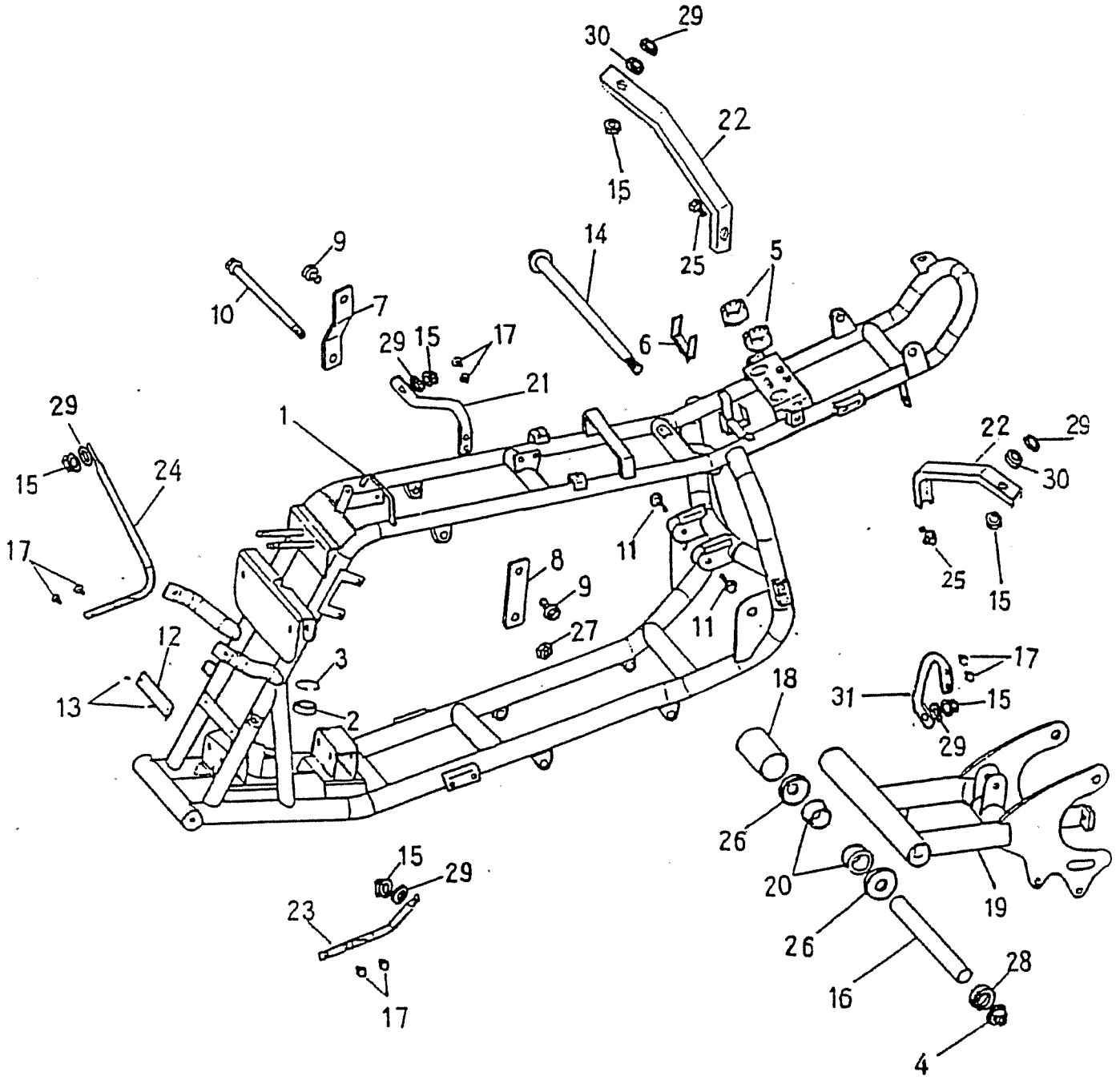
29
30
22
15
25
14
9
10
7
5
6
29
15
17
21
1
29
15
24
17
22
29
30
25
15
11
8
9
27
11
12
13
3
2
17
31
15
29
18
26
20
19
26
16
28
4
15
29
23
17

FRAME, BODY

Item No.	Manco No.	Parts No.	Unit Qty	Description	
1	80238	50100-145-001	1	FRAME COMP.	
2	80239	96100-6002ZZ	1	RADIAL BALL BEARING	6002ZZ
3	80240	94512-3200R	1	INTERNAL CIR CLIP	RTW-32
4	80241	90350-14000	1	NUT NYLON	14MM
5	80242	77211-145-000	2	RUBBER	
6	80243	17505-145-000	1	SPONGE PAD	15X100X4
7	80244	50353-145-001	1	R. ENGINE FIXED PLATE	
8	80245	50354-145-001	1	L. ENGINE FIXED PLATE	
9	80246	96000-10020-14G	2	HEX WASHER FACE BOLT	10X20
10	80247	96000-10208-14	1	HEX WASHER FACE BOLT	10X208
11	80248	96000-08036-12G	2	HEX WASHER FACE BOLT	8X36
12	**	50110-145-000	1	FRAME NO. PLATE	
13	**	90662-105-000	2	RIVET	#4-3
14	80251	96000-14290-19	1	HEX WASHER FACE BOLT	14X290
15	80252	90350-06000	6	NUT NYLON	6MM
16	80253	52104-145-000	1	SWING ARM SPACER	14X20X253
17	80254	92000-06014-10	8	HEX BOLT	6X14
18	80255	52101-145-000	1	RUBBER SLEEVE	
19	80256	52100-145-002	1	SWING ARM SUB ASSY	
20	80257	52103-145-000	2	BUSH	
21	80258	83401-155-000	1	REAR COVER LOWER RIGHT FIXED POLE	
22	80259	83402-155-000	2	REAR COVER UP FIXED PLATE	
23	80260	64307-155-000	1	FRONT COVER LEFT FIXED POLE	
24	80261	64308-155-000	1	FRONT COVER RIGHT FIXED POLE	
25	80262	96000-06012-10G	2	HEX WASHER FACE BOLT	6X12
26	80263	52144-145-000	2	SWING ARM SEAL COVER	
27	80264	90350-10000	1	NUT NYLON	10MMX1.25
28	80265	94101-1426030	1	PLAIN WASHER	14X26X3
29	80266	94101-0618020	6	PLAIN WASHER	6X18X2
30	80267	94102-145-000	2	RUBBER WASHER	
31	80268	83404-155-000	1	REAR COVER LOWER LEFT FIXED POLE	

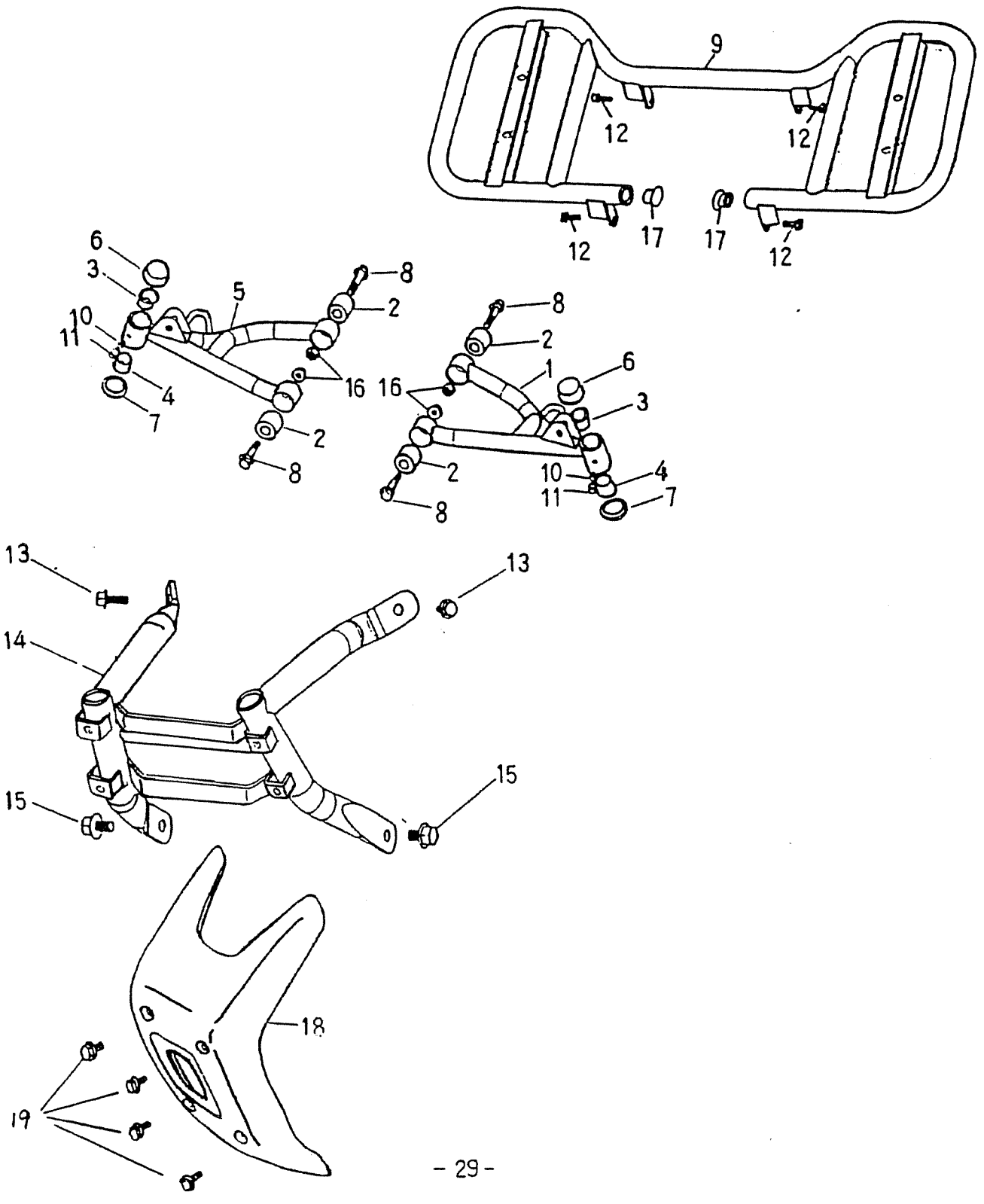
9
12
12
12
12
17
17
6
3
10
11
5
8
2
4
7
16
2
8
8
2
1
6
16
3
2
10
4
11
7
8
13
13
14
15
15
18
19

ARM, FLOOR PANEL, BUMPER

Item No.	Manco No.	Parts No.	Unit Qty	Description	
1	80269	51300-145-001	1	LEFT SUSPENSION ARM	
2	80270	96400-102829	4	RUBBER BUSHING	10X28X29
3	80271	51201-145-000	2	BUSH	15.5
4	80272	51202-145-000	2	BUSH	17
5	80273	51200-145-001	1	RIGHT SUSPENSION ARM	
6	80274	51203-145-000	2	WATERPROOF COVER	
7	80275	51204-145-000	2	DUSTPROOF COVER	
8	80276	96000-10048-14G	4	HEX WASHER FACE BOLT	10X48
9	80277	64310-155-000	1	FLOOR PANEL	
10	80278	96501-06000	2	GREASE VALVE	6MMX5
11	80279	96502-06000	2	GREASE VALVE CAP	6MMX5
12	80246	96000-10020-14G	4	HEX WASHER FACE BOLT	10X20
13	80281	96000-06016-10G	2	HEX WASHER FACE BOLT	6X16
14	80282	50104-155-001	1	BUMPER	
15	80283	96000-08015-12G	2	HEX WASHER FACE BOLT	8X15
16	80284	90350-10000G	4	NUT NYLON	10MMX1.25
17	80285	64330-145-000	2	FLOOR PANEL RUBBER CAP	
18	80286	50107-155-000	1	BUMPER COVER	
19	80262	96000-06012-10G	4	HEX WASHER FACE BOLT	6X12

BODY COVER, SEAT

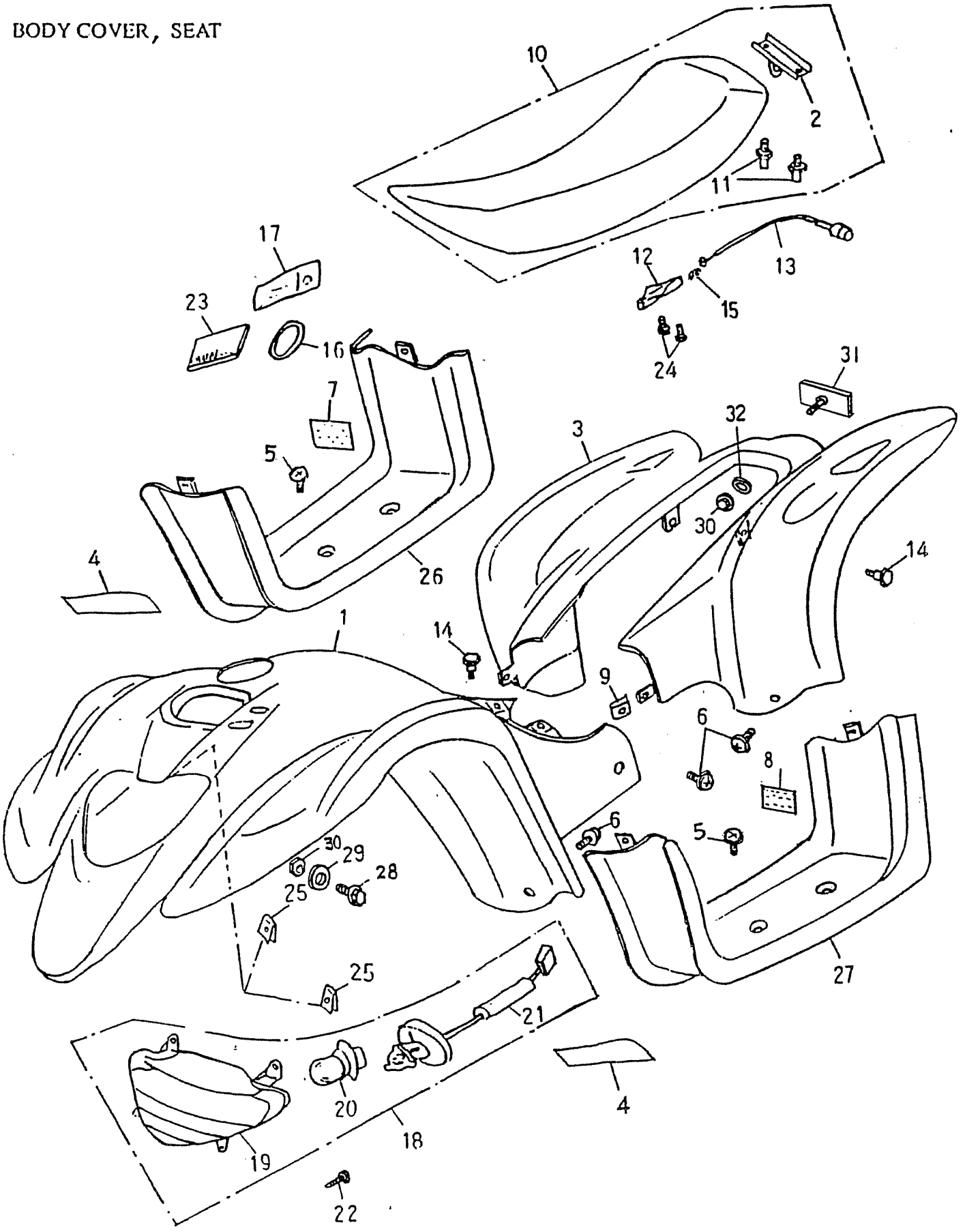

BODY COVER, SEAT

Item No.	Manco No.	Parts No.	Unit Qty	Description	
1	80288-20	64301-155-000	1	FRONT COVER YELLOW	
2	80289	77201-145-000	1	SEAT BRACKET	
3	80290-20	83400-155-001	1	REAR COVER YELLOW	
4	80291	87700-155-000	1	STICKER (SET)	
5	**	93701-06015S	2	PAN FLAT HEAD PHILLIPS BOLT	6X15
6	**	93800-06020S	6	PAN PHILLIPS BOLT	6X20
7	80294	87705-155-000	1	STICKER, AGE WARNING	Y-6
8	80295	87704-155-000	1	STICKER, SET OF 7 WARNINGS	
9	80296	90344-0600A	6	U PLATE NUT	6MM
10	80297	77200-145-000	1	SEAT ASSY	
11	80298	77203-145-000	2	SEAT BOLT	
12	80299	77230-145-000	1	SEAT LOCK ASSY	
13	80300	77212-145-000	1	SEAT RELEASE CABLE	
14	80301	90111-06014-18G	4	LADDER BOLT	6X14X2.5
15	80302	77213-145-000	1	RESET SPRING	1X25
16	80303	91350-145-000	1	RUBBER STRIP	50.1X5.3
17	80304	50120-101-000	1	TOOL BAG	
18	**	33100-125-00A	1	HEAD LIGHT ASSY (E-MARK)	
19	80306	33110-125-00A	1	HEAD LIGHT COVER (E-MARK)	
20	**	34901-110-00A	1	HEAD LIGHT BULB (E-MARK)	
21	**	34801-125-000	1	HEAD LIGHT WIRE	
22	**	93903-05016	4	TAP. SCREW TRUSS HEAD PHILLIPS	5X16
23	11366R3		1	OWNERS MANUAL - ATV	
24	80262	96000-06012-10G	2	HEX WASHER FACE BOLT	6X12
25	**	90344-04000	2	U PLATE NUT	4MM
26	80313	94312-155-000	1	R. FLOOR PANEL	
27	80314	64313-155-000	1	L. FLOOR PANEL	
28	80315	96000-06016-10	2	HEX WASHER FACE BOLT	6X16
29	80266	94101-0618020	2	PLAIN WASHER	6X18X2
30	80109	94050-06000	3	HEX FLANGE NUT W/SERRATION	6MM
31	80318	33741-133-000	1	REFLECTOR (E-MARK,SAE)	
32	**	94101-0615010	1	PLAIN WASHER	6X15X1

FUEL TANK OIL TANK

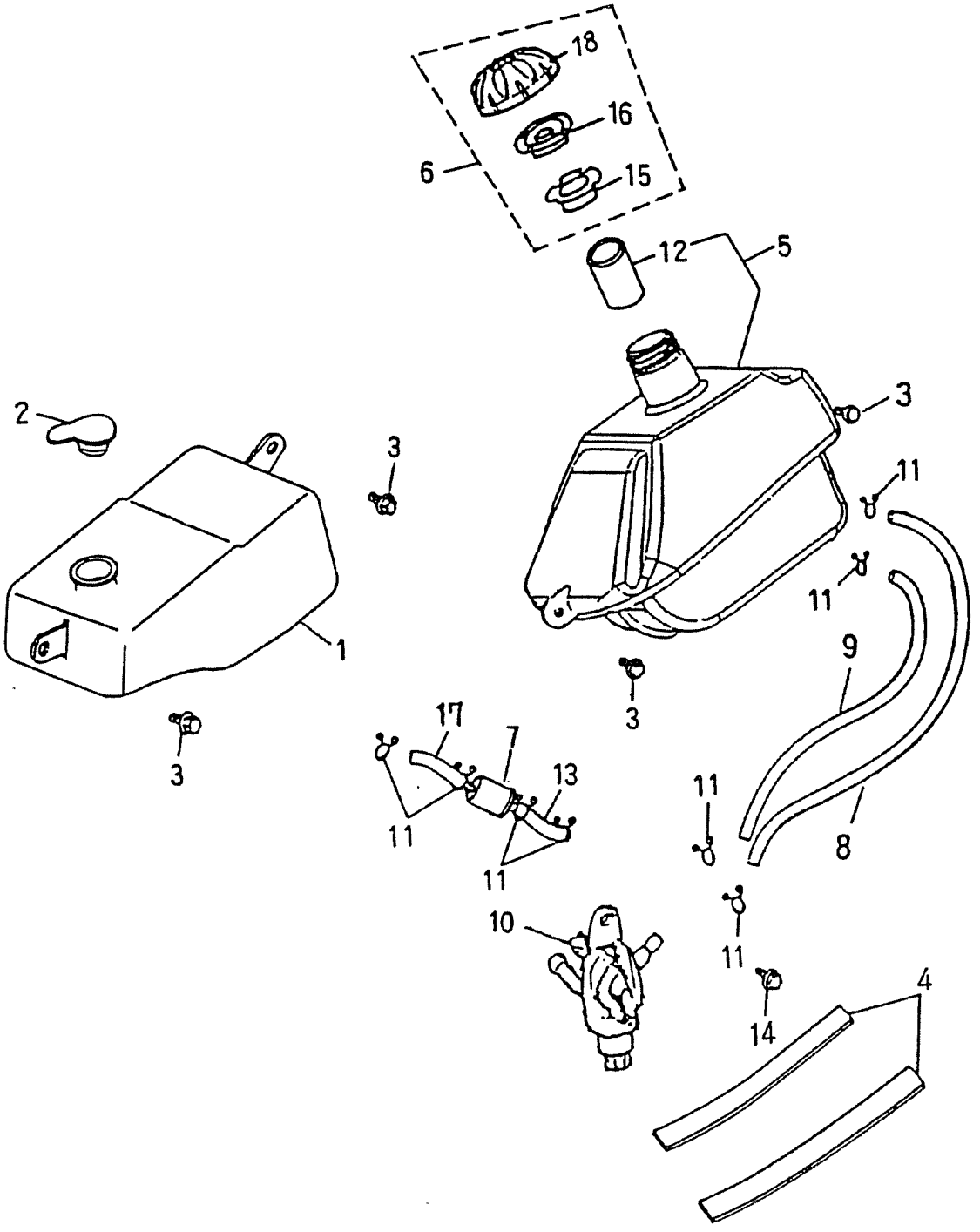

FUEL TANK, OIL TANK

Item No.	Manco No.	Parts No.	Unit Qty	Description	
1	80320	55100-145-000	1	OIL TANK	
2	80321	55105-116-000	1	OIL TANK CAP	
3	80254	92000-06014-10	4	HEX BOLT	6X14
4	80323	17505-145-00A	2	SPONGE PAD	30X100X4
5	80324	17500-155-000	1	FUEL TANK COMP	
6	80325	17620-145-000	1	FUEL TANK CAP ASSY	
7	80046	17502-101-000	1	OIL FILTER CUP	
8	80327	94400-0408300	1	TUBE	4.8X8X300
9	80328	94400-0408280	1	TUBE	4.8X8X280
10	80329	16950-145-000	1	FUEL CUP	
11	80050	94510-08000	8	CLIP	8X0.8
12	80331	17633-145-000	1	FUEL TANK TUBE	
13	80332	94400-0408160	2	TUBE	4.8X8X160
14	80262	96000-06012-10G	1	HEX WASHER FACE BOLT	6X12
15	80334	17631-145-000	1	FUEL TANK CAP GASKET	
16	80335	17632-145-001	1	FUEL TANK CAP BUSHING	
17	80336	94400-0408075	1	TUBE	4.5X8.5X75
18	80549	17621-145-000	1	FUEL TANK CAP BODY	

FRONT WHEEL , SUSPENSION

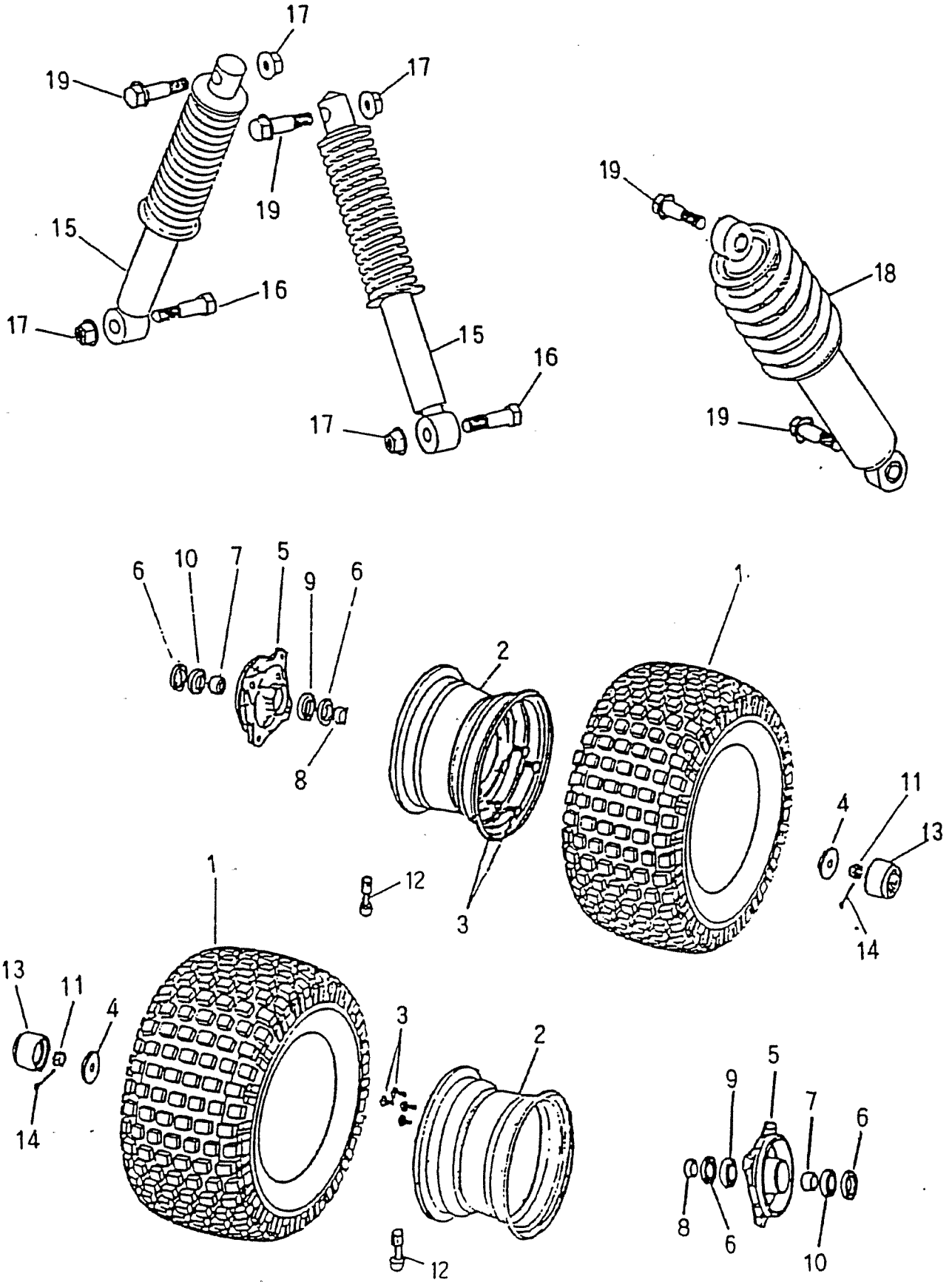

FRONT WHEEL, SUSPENSION

Item No.	Manco No.	Parts No.	Unit Qty	Description	
1	80337	42711-145-000	2	TIRE	16/8/7
2	80338	42701-145-001	2	RIM	
3	80339	96000-10020-14	8	HEX WASHER FACE BOLT	10X20
4	80340	94101-1240045	2	PLAIN WASHER	12X40X4.5
5	80341	42710-145-000	2	FRONT BRAKE DRUM	
6	80342	96500-2235	4	OIL SEAL	22X35X7
7	80343	44620-145-000	2	SPACER TUBE	15X22X15
8	80344	44311-145-000	2	FRONT COLLER	15X22X10
9	80345	96100-6002Z	2	RADIAL BALL BEARING	6002Z
10	80346	96100-6003Z	2	RADIAL BALL BEARING	6003Z
11	80347	94051-12000-17	2	NUT,CROSS THREAD	12MM
12	80348	42616-145-000	2	AIR NOZZEL	
13	80349	42814-145-000	2	RUBBER COVER	
14	80350	94201-30320	2	COTTER PIN	3X32
15	80351	51400-145-000	2	FRONT CUSHION	
16	80352	92000-10040-14G	2	HEX BOLT	10X40
17	80284	90350-10000G	4	NUT NYLON	10MMX1.25
18	80354	52400-145-000	1	REAR CUSHION	
19	80355	96000-10040-14G	4	HEX WASHER FACE BOLT	10X40

REAR WHEEL

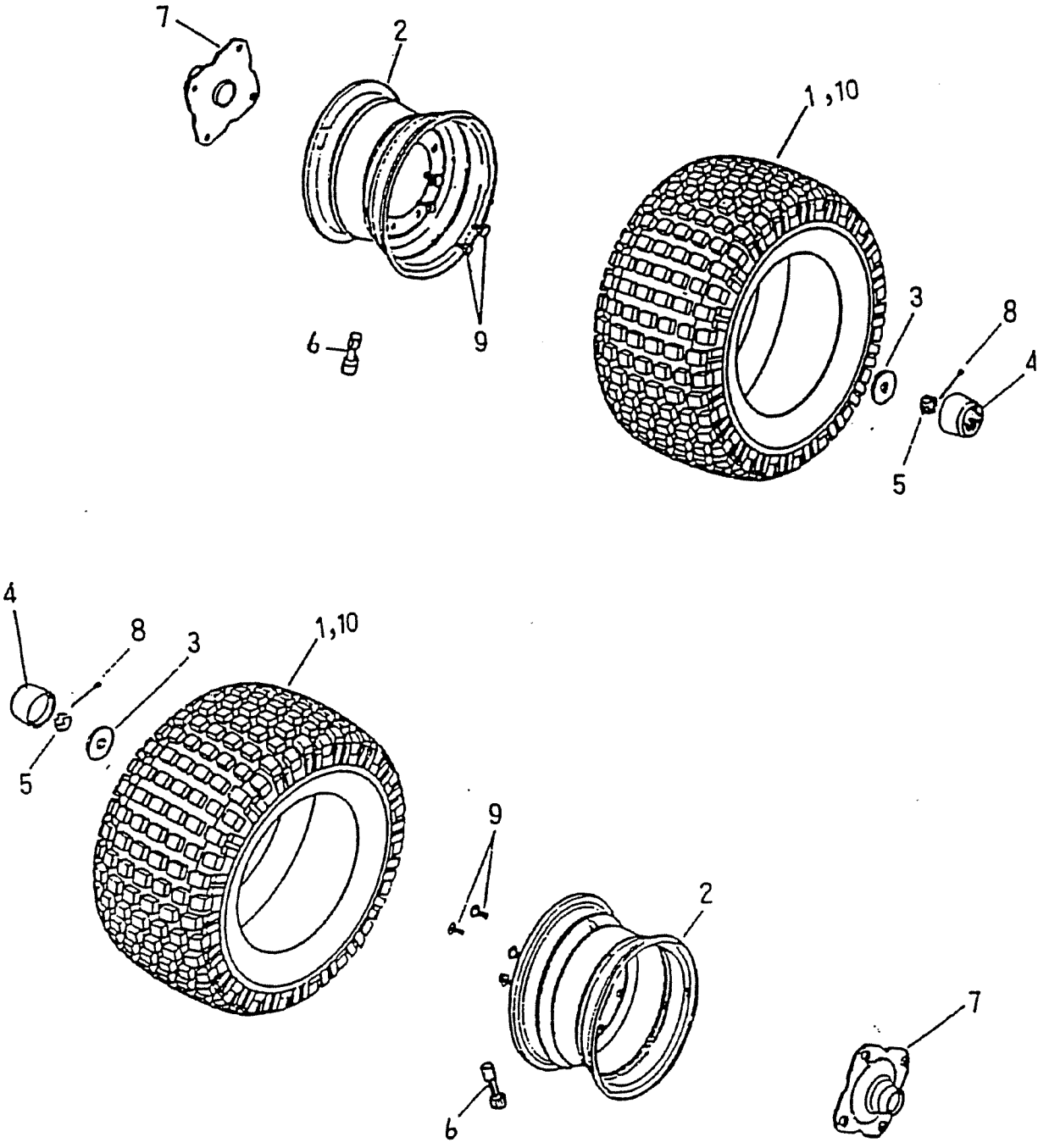

REAR WHEEL

Item No.	Manco No.	Parts No.	Unit Qty	Description	
1	80337	42711-145-000	2	TIRE	16/8/7
2	80338	42701-145-001	2	RIM	
3	80358	94101-1440045	2	PLAIN WASHER	14X40X4.5
4	80349	42814-145-000	2	RUBBER COVER	
5	80360	94052-14000-21	2	SCOTCH FLANGE NUT	14MM
6	80348	42616-145-000	2	AIR NOZZEL	
7	80362	42036-145-001	2	SHAFT CONNECTOR	
8	80350	94201-30320	2	COTTER PIN	3X32
9	80364	96000-10020-14	8	HEX WASHER FACE BOLT	10X20

FRONT BRAKE

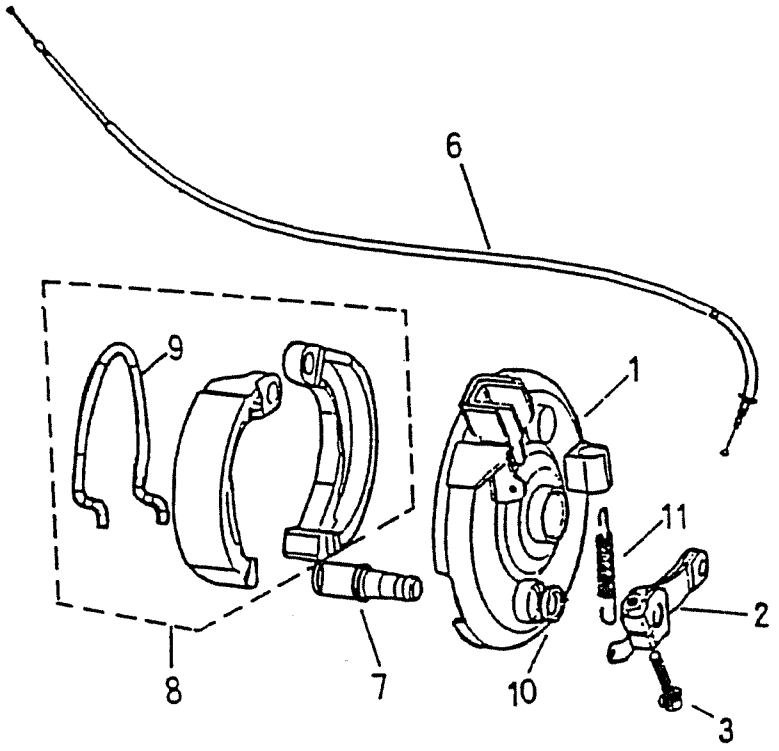

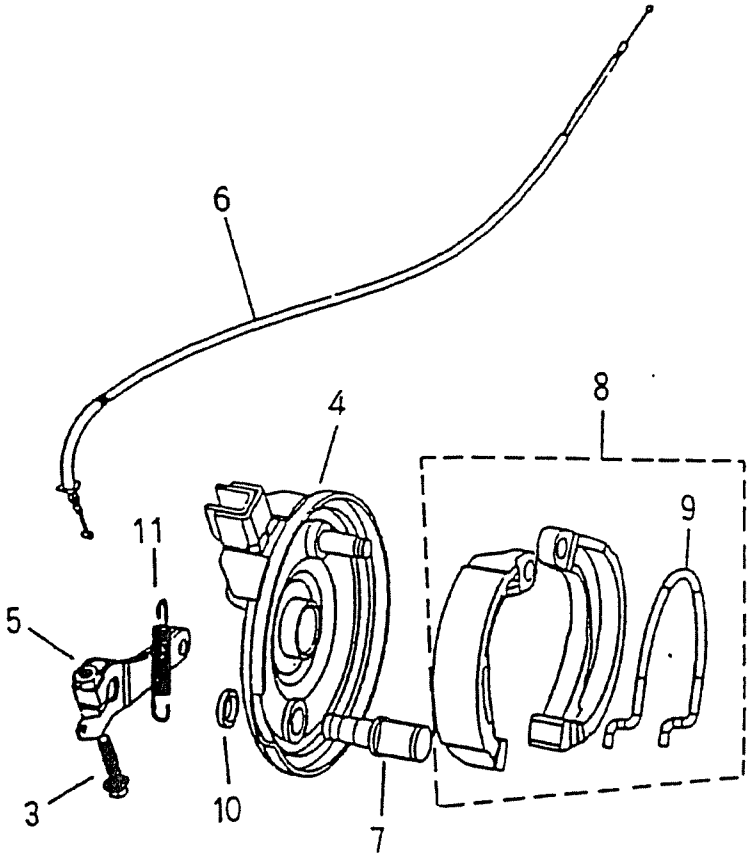

FRONT BRAKE

Item No.	Manco No.	Parts No.	Unit Qty	Description	
1	80365	45010-145-000	1	FRONT LEFT BRAKE PANEL	
2	80366	45410-145-000	1	FRONT LEFT BRAKE ARM	
3	80072	96000-05024-08	2	HEX WASHER FACE BOLT	5X24
4	80368	45020-145-000	1	FRONT RIGHT BRAKE PANEL	
5	80369	45310-145-000	1	FRONT RIGHT BRAKE ARM	
6	80370	45450-145-000	2	FRONT BRAKE CABLE	
7	80371	45141-145-000	2	FRONT BRAKE CAM SHAFT	
8	80372	45120-145-001	2	FRONT BRAKE SHOE COMP	
9	80373	45133-145-000	2	STRAIN SPRING	
10	80187	91313-104-000	2	OIL RING	12.5X3
11	80375	45437-145-000	2	RETURN SPRING	

REAR BRAKE

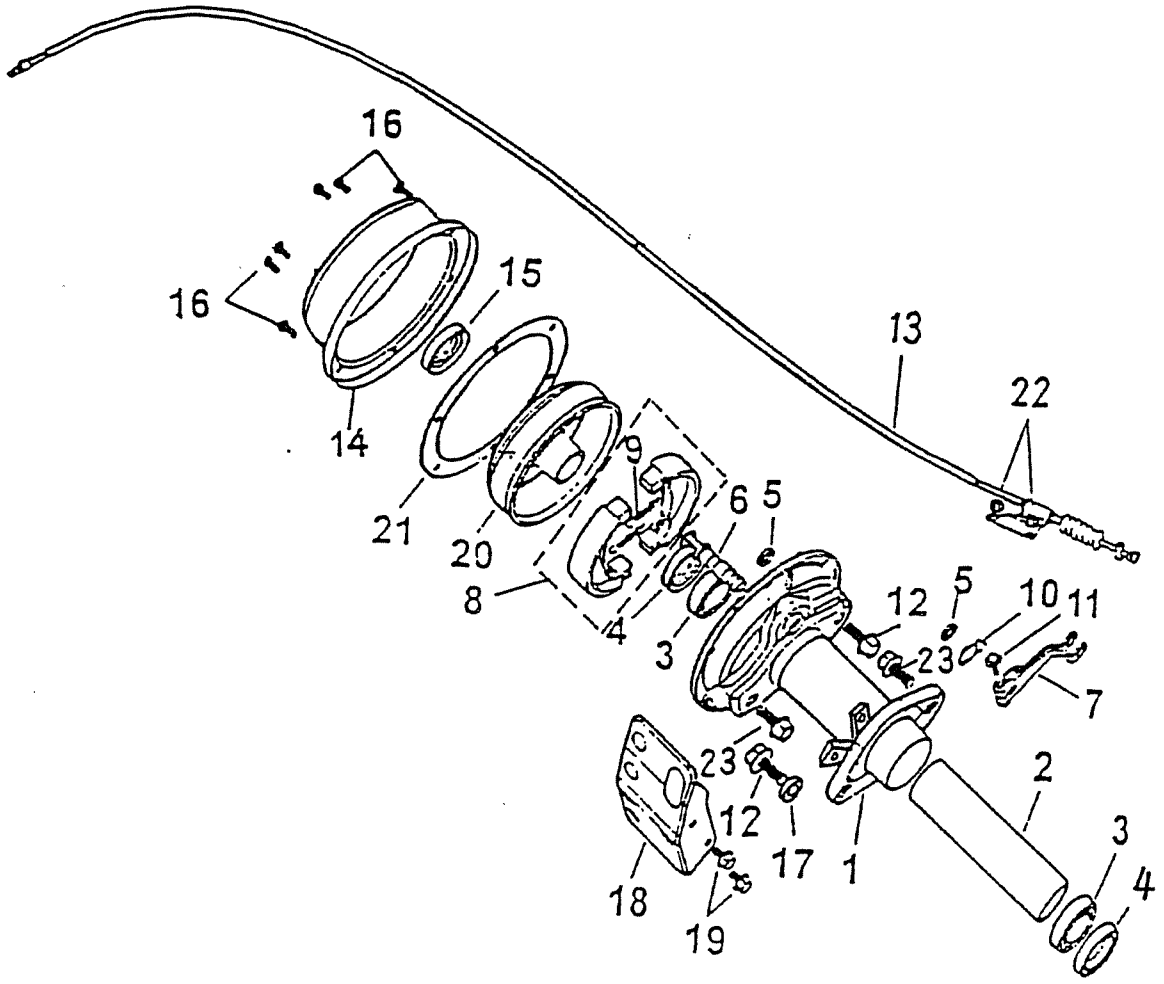

REAR BRAKE

Item No.	Manco No.	Parts No.	Unit Qty	Description	
1	80376	43101-145-001	1	REAR BRAKE PANEL	
2	80377	42313-145-000	1	REAR BRAKE PANEL SPACER	
3	80378	96100-6006ZZ	2	RADIAL BALL BEARING	6006ZZ
4	80379	96500-355511	2	OIL SEAL	35X55X11
5	80380	96500-14204	2	OIL SEAL	14X20X4
6	80381	43141-145-000	1	REAR BRAKE CAM SHAFT	
7	80382	43410-145-000	1	REAR BRAKE ARM	
8	80383	43120-145-000	1	REAR BRAKE SHOE COMP	
9	80384	43151-145-000	2	SHOE STRAIN SPRING	1.6X36
10	80385	42617-145-000	1	RETURN SPRING	
11	80386	96000-06032-10	1	HEX WASHER FACE BOLT	6X32
12	80387	96000-12027-17	2	HEX WASHER FACE BOLT	12X27
13	80388	43450-145-000	1	REAR BRAKE CABLE	
14	80389	43612-145-000	1	REAR DRUM COVER	
15	80390	96500-325211	1	OIL SEAL	32X52X11
16	80262	96000-06012-10G	6	HEX WASHER FACE BOLT	6X12
17	80392	94101-1225050	1	PLAIN WASHER	12X25X5
18	80393	42613-145-000	1	REAR BRAKE COVER	
19	80394	96000-08012-12G	2	HEX WASHER FACE BOLT	8X12
20	80395	42601-145-000	1	REAR DRUM	
21	80396	42614-145-000	1	REAR DRUM COVER GASKET	
22	80147	94050-08000	2	HEX FLANGE NUT W/SERRATION	8MM
23	80398	96000-12022-17	2	HEX WASHER FACE BOLT	12X22
NI	80571		1	REAR BRAKE ADJUSTING NUT	not illustrated
NI	80572		1	REAR BRAKE CABLE ANCHOR PIN	not illustrated

HANDLE BAR

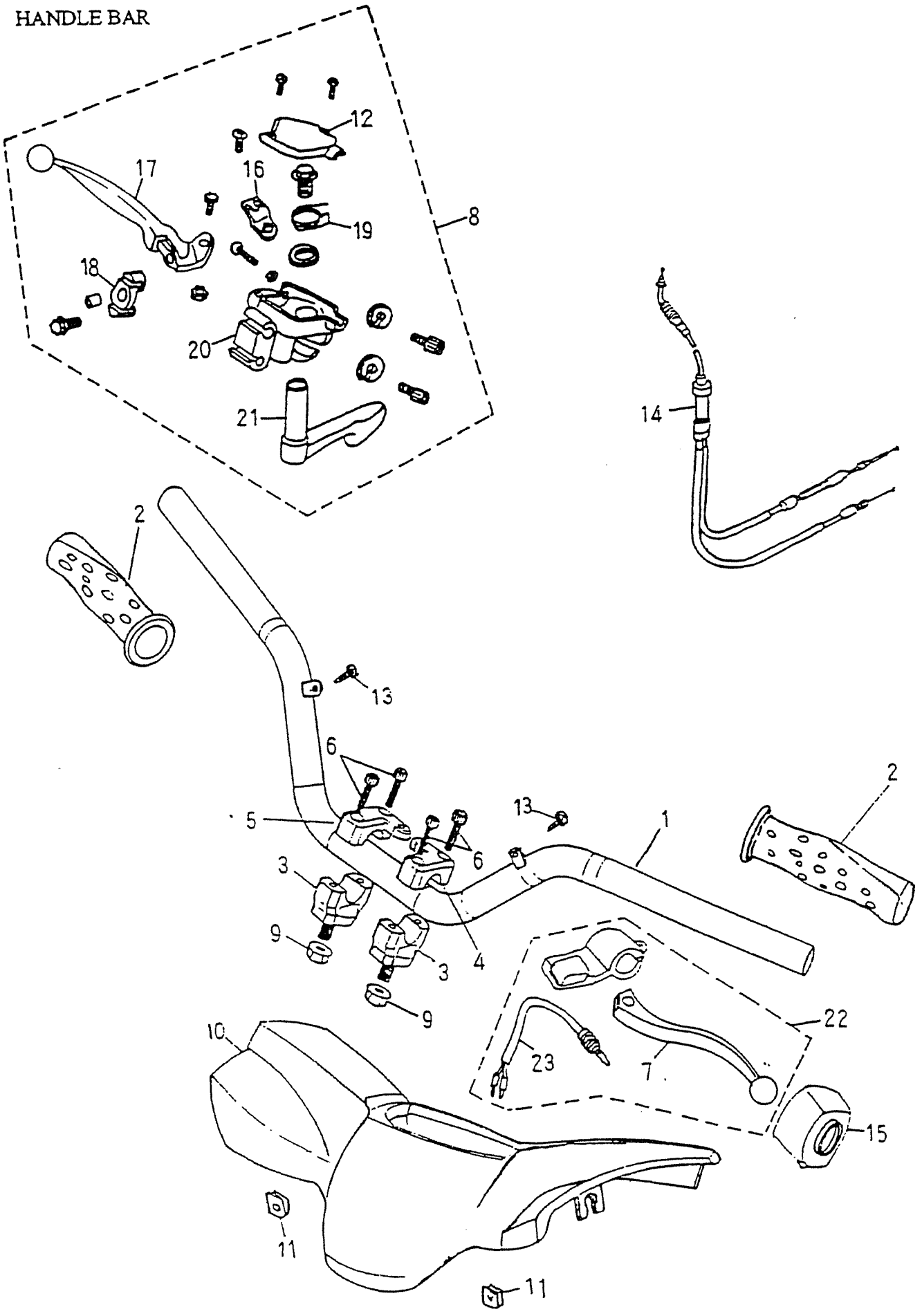

HANDLE BAR

Item No.	Manco No.	Parts No.	Unit Qty	Description	
1	80399	53100-145-000	1	HANDLE BAR	
2	80400	53166-155-000	2	HANDLE GRIP	
3	80401	53101-145-000	2	HANDLE BAR BOTTOM CLAMP	
4	80402	53102-145-000	1	LEFT HANDLE BAR CLAMP	
5	80403	53103-145-000	1	RIGHT HANDLE BAR CLAMP	
6	80131	91000-06025	4	HEX SOCKET BOLT	6X25
7	80405	53178-145-000	1	LEFT LEVER	
8	80406	53170-145-000	1	RIGHT LEVER ASSY	
9	80284	90350-10000G	2	NUT NYLON	10MMX1.25
10	80408-20	64211-155-000	1	FRONT HANDLE BAR COVER - YELLOW	
11	80409	90344-05000	2	U PLATE NUT	5MM
12	80410	53171-145-000	1	LEVER BODY COVER	
13	**	93903-05016	2	TAP. SCREW TRUSS HEAD PHILLIPS	5X16
14	80412	17910-145-000	1	THROTTLE CABLE	
15	80413	35200-145-001	1	L. HANDLE SWITCH ASSY	
16	80414	53174-145-000	1	THROTTLE CABLE BRACKET	
17	80415	53175-145-000	1	RIGHT LEVER	
18	80416	53173-145-000	1	CABLE BRACKET	
19	80417	53184-145-000	1	THROTTLE LEVER SPRING	
20	80418	53172-145-000	1	LEVER BRACKET	
21	80419	53180-145-000	1	THROTTLE LEVER	
22	80420	53179-155-000	1	LEFT LEVER ASSY	
23	80421	35345-145-000	1	L. BRAKE SWITCH WIRE	

REAR WHEEL AXLE CHAIN

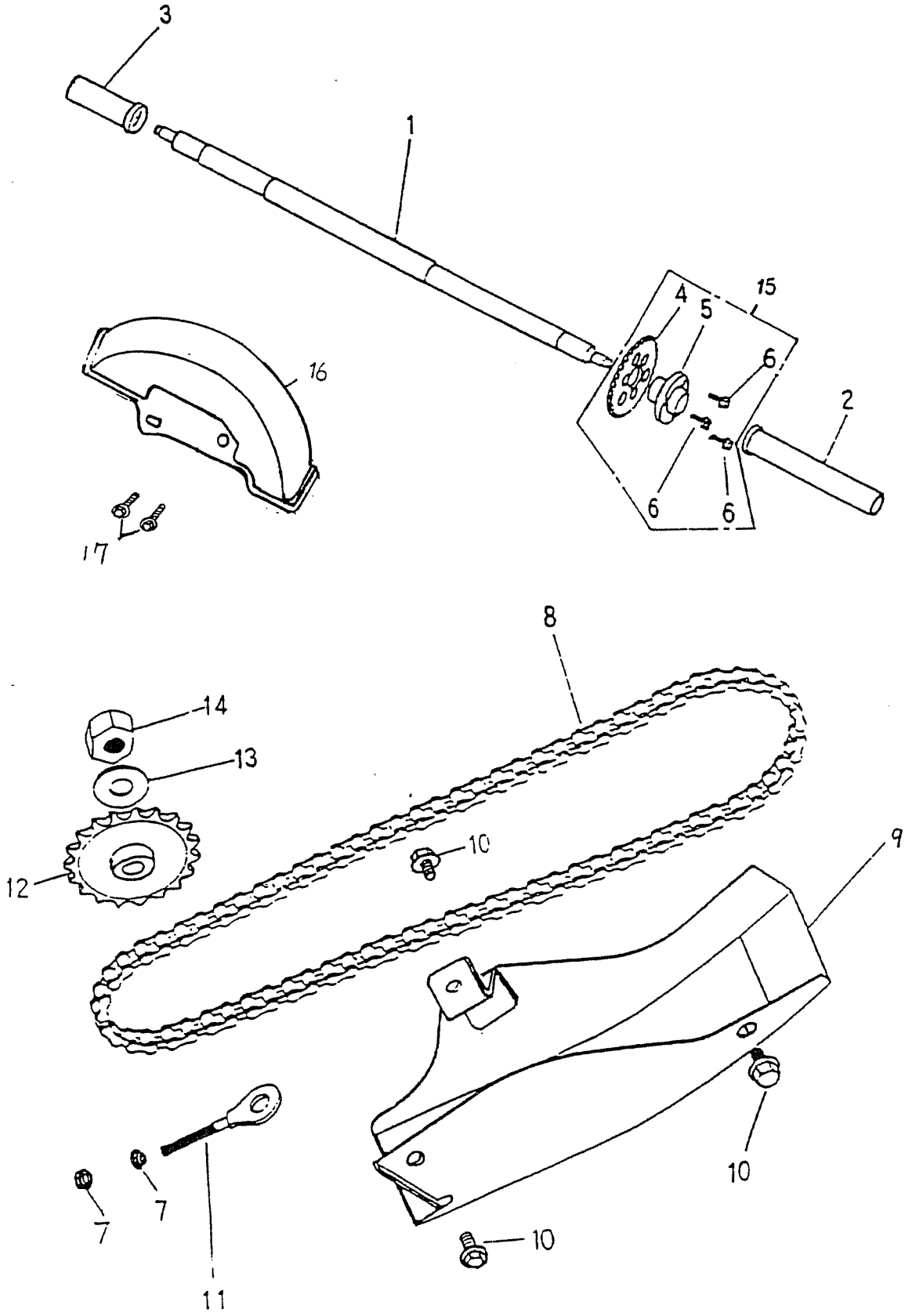

REAR WHEEL AXLE, CHAIN

Item No.	Manco No.	Parts No.	Unit Qty	Description	
1	80422	42301-145-000	1	REAR WHEEL AXLE	
2	80423	42620-145-001	1	RIGHT SPACER COLLAR	
3	80424	42622-145-001	1	LEFT SPACER COLLAR	
4	80425	41201-145-00A	1	REAR SPROCKET	35T
5	80426	42610-145-000	1	FINAL DRIVE FLANGE	
6	80065	96000-08020-12	3	HEX WASHER FACE BOLT	8X20
7	80109	94050-06000	2	HEX FLANGE NUT W/SERRATION	6MM
8	80429	40530-145-00B	1	DRIVE CHAIN	428X80
9	80430	40510-145-001	1	CHAIN PROTECT COVER	
10	80394	96000-08012-12G	3	HEX WASHER FACE BOLT	8X12
11	80432	40543-145-000	1	DRIVE CHAIN ADJUSTER	
12	80433	23801-145-000	1	DRIVE SPROCKET ASSY	19T
13	**	94101-1529030	1	PLAIN WASHER	15X29X3
14	80241	90350-14000	1	NUT NYLON	14MM
15	80436	42600-145-00A	1	REAR SPROCKET ASSY	35T
16	80437	40511-152-000	1	REAR CHAIN COVER	
17	80262	96000-06012-10G	2	HEX WASHER FACE BOLT	6X12

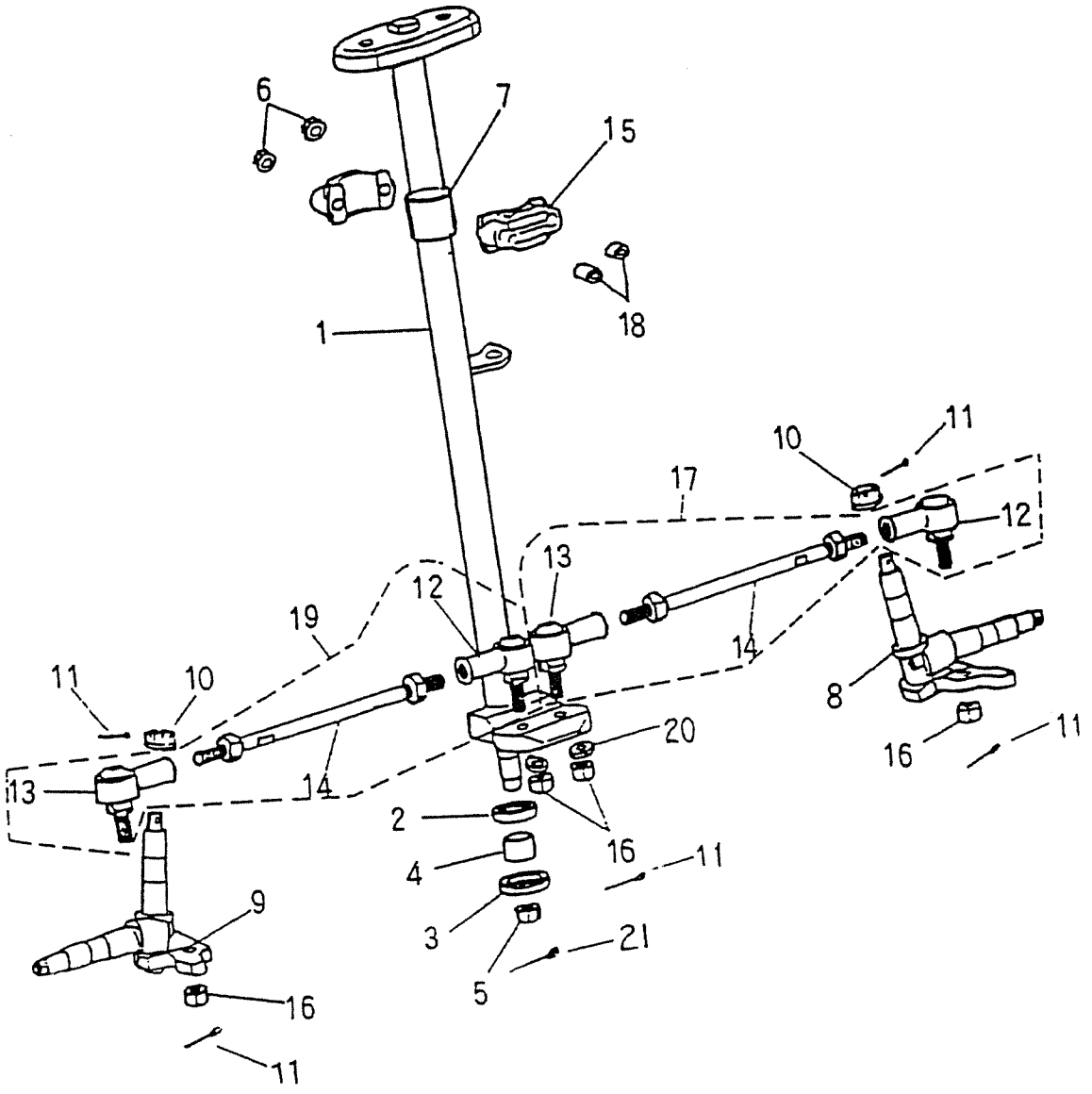
6
7
15
18
1
10
11
17
12
13
12
19
14
11
10
8
20
16
11
13
14
2
16
4
11
9
3
21
5
16
11

STEERING

Item No.	Manco No.	Parts No.	Unit Qty	Description	
1	80439	51109-155-000	1	STEERING SHAFT ASSY	
2	80440	96500-18327	1	OIL SEAL	18X32X7
3	80342	96500-2235	1	OIL SEAL	22X35X7
4	80343	44620-145-000	1	SPACER TUBE	15X22X15
5	80241	90350-14000	1	NUT NYLON	14MM
6	80147	94050-08000	2	HEX FLANGE NUT W/SERRATION	8MM
7	80445	51114-145-000	1	PU BUSH	
8	80446	44510-145-000	1	LEFT KNUCKLE	
9	80447	44520-145-000	1	RIGHT KNUCKLE	
10	80448	94052-10000-14	2	SCOTCH FLANGE NUT	10MM
11	**	94201-20190	6	COTTER PIN	2X19
12	80450	44511-145-001	2	BALL JOINT - LEFT THREAD	
13	80451	44521-145-001	2	BALL JOINT - RIGHT THREAD	
14	80452	91001-10200	2	STUD BOLT	10X200
15	80453	51113-145-000	2	STEERING SHAFT HOLDER	
16	80284	90350-10000G	4	NUT NYLON	10MMX1.25
17	80455	44500-145-001	1	RIGHT LINK ASSY	
18	80456	51115-145-000	2	HOLDER SPACER COLLAR	
19	80457	44501-145-001	1	LEFT LINK ASSY	
20	**	94105-1022025G	2	PLAIN WASHER	10X22X2.5
21	80350	94201-30320	1	COTTER PIN	3X32

ELETRICAL PARTS

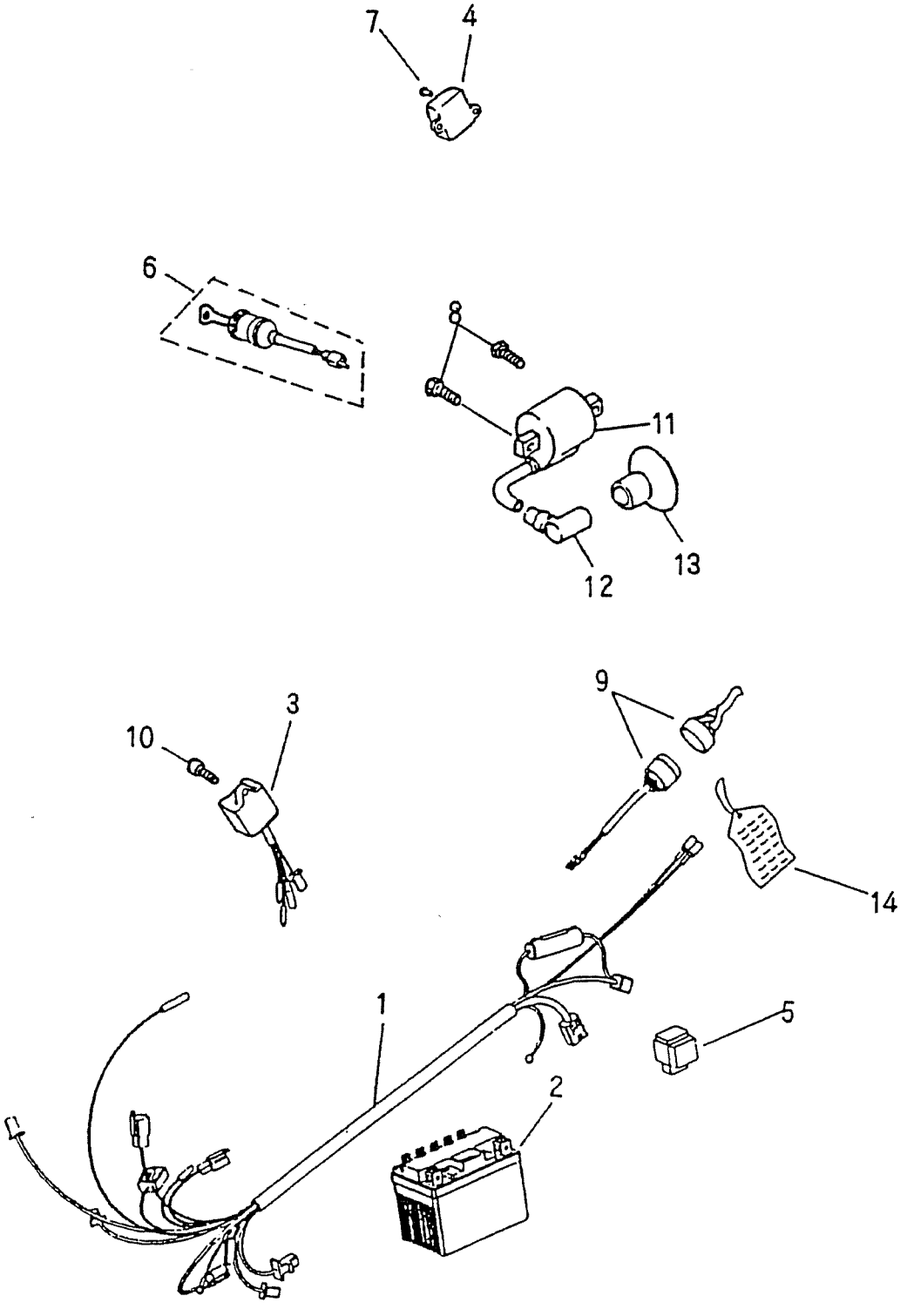

ELECTRICAL PARTS

Item No.	Manco No.	Parts No.	Unit Qty	Description	
1	80460	32100-145-001	1	MAIN WIRE HARNESS	
2	80461	31500-116-000	1	BATTERY	12V
3	80462	30410-145-00A	1	C.D.I. UNIT	
4	80463	31600-110-000	1	REGULATOR RECTIFIER	
5	80464	38501-105-000	1	STARTING RELAY	
6	80465	53100-145-001	1	MAIN SWITCH ASSY	
6a	80573	35100-145-00B	1	MAIN SWITCH ASSY W/OIL SAFETY LIGHT	
7	80466	93500-05012	1	PAN PHILLIPS BOLT	5X12
8	80467	96000-06020-10	2	HEX WASHER FACE BOLT	6X20
9	80468	31800-145-000	1	SAFETY SWITCH	
10	**	93500-06015	1	PAN PHILLIPS BOLT	6X15
11	80470	30510-116-000	1	HIGH TENSION COIL	
12	80471	30700-101-000	1	SPARK PLUG CAP	
13	80472	30605-116-000	1	RUBBER CAP	
14	80473	87707-145-000	1	SAFETY SWITCH WARNING TAG	